US Department of Transportation
Federal Aviation Administration

MAJOR REPAIR AND ALTERATION
(Airframe, Powerplant, Propeller, or Appliance)

Form Approved OMB No. 2120-0020 2/28/2011

Electronic Tracking Number **2019000604**

For FAA Use Only

Electronically Submitted 337

INSTRUCTIONS: Print or type all entries. See Title 14 CFR §43.9, Part 43 Appendix B, and AC 43.9-1 (or subsequent revision thereof) for instructions and disposition of this form. This report is required by law (49 U.S.C. §44701). Failure to report can result in a civil penalty for each such violation. (49 U.S.C. §46301(a))

1. Aircraft	Nationality and Registration Mark **N** 214GB	Serial No. BB-1668	
	Make RAYTHEON AIRCRAFT COMPANY	Model B200	Series
2. Owner	Name *(As shown on registration certificate)* PTERODACTYL INC	Address *(As shown on registration certificate)* Address 3511 SILVERSIDE RD STE 105 City WILMINGTON State DE Zip 198104902 Country UNITED STATES	

3. For FAA Use Only

Inspector Signature _____

Designee Signature _____ Authorization Number _____

4. Type		5. Unit Identification			
Repair	Alteration	Unit	Make	Model	Serial No.
☐	☒	AIRFRAME	—	*(As described in Item 1 above)*	—
☐	☐	POWERPLANT			
☐	☐	PROPELLER			
☐	☐	APPLIANCE	Type Manufacturer		

6. Conformity Statement

A. Agency's Name and Address	B. Kind of Agency	
Name Southeast Aerospace, Inc. Address 1399 General Aviation Drive City Melbourne State FL Zip 32935 Country UNITED STATES	☐ U. S. Certificated Mechanic ☐ Foreign Certificated Mechanic ☒ Certificated Repair Station ☐ Certificated Maintenance Organization	☐ Manufacturer C. Certificate No. S66R266N

D. I certify that the repair and/or alteration made to the unit(s) identified in item 5 above and described on the reverse or attachments hereto have been made in accordance with the requirements of Part 43 of the U.S. Federal Aviation Regulations and that the information furnished herein is true and correct to the best of my knowledge.

Extended range fuel per 14 CFR Part 43 App. B ☐

Signature/Date of Authorized Individual

Randall Pickron

Digitally signed by Randall Pickron
DN: c=US, o=FAA, ou=Southeast Aerospace, Inc., ou=Melbourne, ou=FL, cn=Randall Pickron, email=randy.pickron@seaerospace.com
Date: 2019.08.28 15:50:22 -04'00'

7. Approval for Return to Service

Pursuant to the authority given persons specified below, the unit identified in item 5 was inspected in the manner prescribed by the Administrator of the Federal Aviation Administration and is ☒ Approved ☐ Rejected

BY								
		FAA Flt. Standards Inspector		Manufacturer		Maintenance Organization		Persons Approved by Canadian Department of Transport
		FAA Designee	☒	Repair Station		Inspection Authorization		Other *(Specify)*

Certificate or Designation No. S66R266N

Signature/Date of Authorized Individual

Randall Pickron

Digitally signed by Randall Pickron
DN: c=US, o=FAA, ou=Southeast Aerospace, Inc., ou=Melbourne, ou=FL, cn=Randall Pickron, email=randy.pickron@seaerospace.com
Date: 2019.08.28 15:54:30 -04'00'

NOTICE

Weight and balance or operating limitation changes shall be entered in the appropriate aircraft record. An alteration must be compatible with all previous alterations to assure continued conformity with the applicable airworthiness requirements.

8. Description of Work Accomplished
(If more space is required, attach additional sheets. Identify with aircraft nationality and registration mark and date work completed.)

N214GB	08/28/2019
Nationality and Registration Mark	Date

1) Installed Garmin G1000Nxi System in accordance with STC SA01535WI-D. ADS-B was tested on the ground using a Aeroflex IFR 6000 Test Set and both Transponders were found to be in compliance with 14 CFR 91.227. Installed the FAA Approved Flight Manual Supplement, P/N: 190-00915-N2, Revision 3 dated 07/16/2018 into the Aircraft Flight Manual. Installed the FAA Approved Instructions for Continued Airworthiness P/N: 190-00915-N1, Revision 4 dated 07/16/2018 into the Aircraft Maintenance Records.

2) Installed Feed Through Connector in the Aft Pressure Bulkhead in accordance with a Structural 8110-3 dated 08/15/2019.

3) Aircraft was weighed and the Equipment List was updated.

4) EMF tests were conducted and aircraft systems and new installed equipment did not interfere with each other.

---------- End ----------

☐ Additional Sheets Are Attached

US Department of Transportation
Federal Aviation Administration

MAJOR REPAIR AND ALTERATION
(Airframe, Powerplant, Propeller, or Appliance)

OMB No. 2120-0020
Exp: 5/31/2018

Electronic Tracking Number

For FAA Use Only

INSTRUCTIONS: Print or type all entries. See Title 14 CFR §43.9, Part 43 Appendix B, and AC 43.9-1 (or subsequent revision thereof) for instructions and disposition of this form. This report is required by law (49 U.S.C. §44701). Failure to report can result in a civil penalty for each such violation. (49 U.S.C. §46301(a))

1. Aircraft	Nationality and Registration Mark: N214GB	Serial No.: BB-1668	
	Make: Beechcraft	Model: B200	Series:
2. Owner	Name *(As shown on registration certificate)*: GTG LLC	Address *(As shown on registration certificate)*: Address 15725 N Dallas Pkwy Ste 300; City Addison; State TEXAS; Zip 75001; Country USA	

3. For FAA Use Only

4. Type		5. Unit Identification			
Repair	Alteration	Unit	Make	Model	Serial No.
[x]	[ ]	AIRFRAME	Beechcraft	*(As described in Item 1 above)*	BB-1668
[ ]	[ ]	POWERPLANT			
[ ]	[ ]	PROPELLER			
[ ]	[ ]	APPLIANCE	Type / Manufacturer		

6. Conformity Statement

A. Agency's Name and Address	B. Kind of Agency	
Name: North Texas Aircraft Services, Inc.	[x] U. S. Certificated Mechanic	[ ] Manufacturer
Address: 4480 Glenn Curtiss Drive	[ ] Foreign Certificated Mechanic	C. Certificate No.
City: Addison State: Texas	[ ] Certificated Repair Station	3554782
Zip: 75001 Country: USA	[ ] Certificated Maintenance Organization	

D. I certify that the repair and/or alteration made to the unit(s) identified in item 5 above and described on the reverse or attachments hereto have been made in accordance with the requirements of Part 43 of the U.S. Federal Aviation Regulations and that the information furnished herein is true and correct to the best of my knowledge.

Extended range fuel per 14 CFR Part 43 App. B [ ]	Signature/Date of Authorized Individual: Charlie Williams 11-13-2015

7. Approval for Return to Service

Pursuant to the authority given persons specified below, the unit identified in item 5 was inspected in the manner prescribed by the Administrator of the Federal Aviation Administration and is [x] Approved [ ] Rejected

BY								
	[ ]	FAA Flt. Standards Inspector	[ ]	Manufacturer	[ ]	Maintenance Organization	[ ]	Persons Approved by Canadian Department of Transport
	[ ]	FAA Designee	[ ]	Repair Station	[X]	Inspection Authorization		Other *(Specify)*

Certificate or Designation No. 2885669	Signature/Date of Authorized Individual: 11-13-2015

FAA Form 337 (10/06)

NOTICE

Weight and balance or operating limitation changes shall be entered in the appropriate aircraft record. An alteration must be compatible with all previous alterations to assure continued conformity with the applicable airworthiness requirements.

8. Description of Work Accomplished
(If more space is required, attach additional sheets. Identify with aircraft nationality and registration mark and date work completed.)

N214GB	11/13/2015
Nationality and Registration Mark	Date

TT 6630.0 LDGS 8245

Completed repair to L/H Aux fuel tank access hole per North Texas Aircraft Service Drawing # 15-143-01, Structural Analysis Report SA15-143 and FAA Form 8110-3 dated 11/10/2015.
//Nothing Follows//

☑ Additional Sheets Are Attached

REVISIONS			
REV	DESCRIPTION	DATE	APPROVED

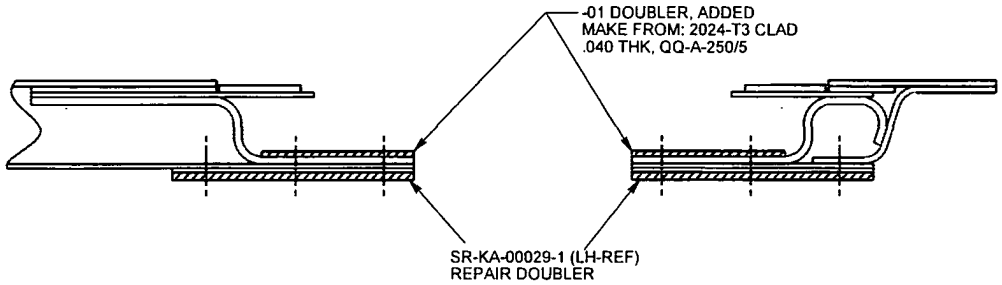

-101 CORROSION REPAIR

(REF: FIG 2 OF SR-KA-00029)

DESCREPANCY:
CORROSION DAMAGE IS BEYOND ALLOWABLE LIMITS SET BY BEECH STANDARD REPAIR NUMBER SR-KA-00029, REV. 1.

DISPOSITION:
1. REPAIR CORROSION DAMAGE IN ACCORDANCE WITH BEECH STANDARD REPAIR DRAWING NUMBER SR-KA-00029, REV. 1.
2. WHERE CORROSION DAMAGE IS BEYOND LIMITS INSTALL -01 DOUBLER AS SHOWN.
3. ALODINE, AND 2 COATS EPOXY PRIME -01 DBLR PER MAINTENANCE MANUAL.
4. DE-BURR CUT AND DRILLED EDGES. (.005 MAX CHAMFER)
5. -01 DBLR COVERS THE ENTIRE CIRCUMFERENCE OF THE ACCESS HOLE.

PROPRIETARY NOTICE
ALL INFORMATION DISCLOSED HEREIN IS CONSIDERED PROPRIETARY AND MAY NOT BE REPRODUCED OR USED FOR ANY PURPOSE EXCEPT AS EXPRESSLY GRANTED IN WRITING BY NORTH TEXAS AIRCRAFT SERVICE, INC.

Tolerance Unless Otherwise Specified
.X ± .100
.XX ± .030
.XXX ± .005
angles ± 0.5 deg
Dimensions in Inches

North Texas Aircraft Service, Inc.
4480 Glenn Curtiss Drive
Addison, Texas 75001

REPAIR - AUX FUEL TANK ACCESS HOLE, CORROSION

MAKE: BEECHCRAFT	DRAFTER: Michael Lieblich	B	CAGE CODE	DWG NO. 15-143-01	REV. IR
MODEL: B200	APPROVAL				
S/N: BB-1668					
N 214GB		Scale = 1 : 1	Date: 10 NOV 15	Sheet 1 of 1	

North Texas Aircraft Service®

STRUCTURAL ANALYSIS

REPORT NO: **SA15-143** DATE: **November 10, 2015**

CORROSION REPAIR

DEPARTMENT: REPAIR STATION CHECKED BY:

SECTION: MECHANICAL

PREPARED BY: Michael Lieblich APPROVAL:

PROPRIETARY NOTICE
THIS DATA AND INFORMATION DISCLOSED HEREIN IS PROPRIETARY DATA OF NORTH TEXAS AIRCRAFT SERVICE. NEITHER THIS DATA NOR THE DATA CONTAINED HEREIN SHALL BE REPRODUCED, USED OR DISCLOSED TO OTHERS WITHOUT THE WRITTEN AUTHORIZATION OF NORTH TEXAS AIRCRAFT SERVICE.

REVISIONS

REV LTR	REV BY	APPROVAL	DATE	REVISIONS AND / OR ADDITIONS
IR	ML		11/10/15	Initial Release

INTRODUCTION

This report consists of the structural substantiation of the major repair which is defined in accordance with the following drawing;

1. 15-143-01 Repair - Aux Fuel Tank Access Hole, Corrosion

REFERENCES

1. 14 CFR Part 23 current revision level.
2. MMPDS-06, "Metallic Materials Properties Development and Standardization (MMPDS)," dated April 2011, FAA.
3. E-Systems Structures Manual.

LOADS

Loads are based on equivalent strength analysis, for this major repair. The loss in strength due to the installation is compensated by use of a reinforcing doubler, or equivalent materials which maintains the material stress levels at or below the original design levels.

CERTIFICATION BASIS

This airplane is a Beechcraft model B200, serial number BB-1668. The certification basis for this model airplane is presented in the Type Certification Data Sheet number A24CE. The certification basis is;

Certification Basis (Model 200 Series)	FAR Part 23, effective February 1, 1965, as amended by 23-1 through 23-9, Amendment 23-11, FAR Paragraphs 23.175 and associated FARs 23.143(a), 23.145(d), 23.153, 23.161(c)(3), and 23.173(a) as amended by Amendment 23-14; FAR 23.951(c) and FAR 23.997(d) as amended by Amendment 23-15 (A200CT and B200 series, only); FAR 23.1545(a) as amended by Amendment 23-23 and FAR 23.1325(e) as amended by Amendment 23-20 (B200 Series only); FAR 23.1305(n), 23.1529 as amended by Amendment 23-26; FAA Special Conditions 23-47-CE-5 issued October 30, 1972, Amendment 1 dated December 18, 1973, and Amendment 2 dated January 12, 1979; FAR Paragraphs 25.929 and 25.1419 of FAR Part 25 as amended to December 31, 1972, and FAR 25.831(d) through Amendment 25-41 (For all Model 200 and B200 series aircraft approved for 35,000 feet); SFAR 27 through

This analysis will use the 14CFR Part 23 rules at amendment level 23-11.

ANALYSIS

REPAIR - AUX FUEL TANK ACCESS HOLE, CORROSION ***15-143-01***

The left center wing, upper skin panel, auxiliary fuel tank access hole, dish lower flange is susceptible to corrosion damage. The manufacturer of the airplane, Hawker Beechcraft, has developed a standard repair to address the common corrosion damage. The standard repair is presented in drawing number SR-KA-00029, Rev. 1. The limits of the damage are presented in the Figure 1.

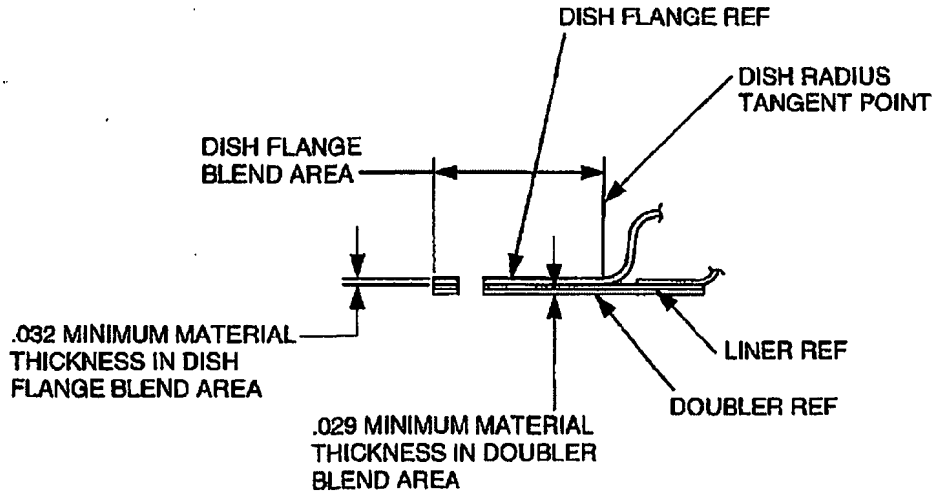

Figure 1. Standard Repair Corrosion Limits

There are two parts that are corroded. The upper dish flange which is nominally .063 inches thick, and the lower internal doubler which is nominally .040 inches thick. The corrosion damage is blended away and the remaining undamaged metal is shown in Figure 2. The lower damage limit is .029 inches, and there are seven (7) areas that were measured below the .029 limit. The critical depth is .022 inches noted on the right side (outboard) of Figure 2. The upper dish has a damage limit of .032 inches and there are two (2) areas that are measured at .018 inches deep as shown on the left (inboard) side of Figure 2.

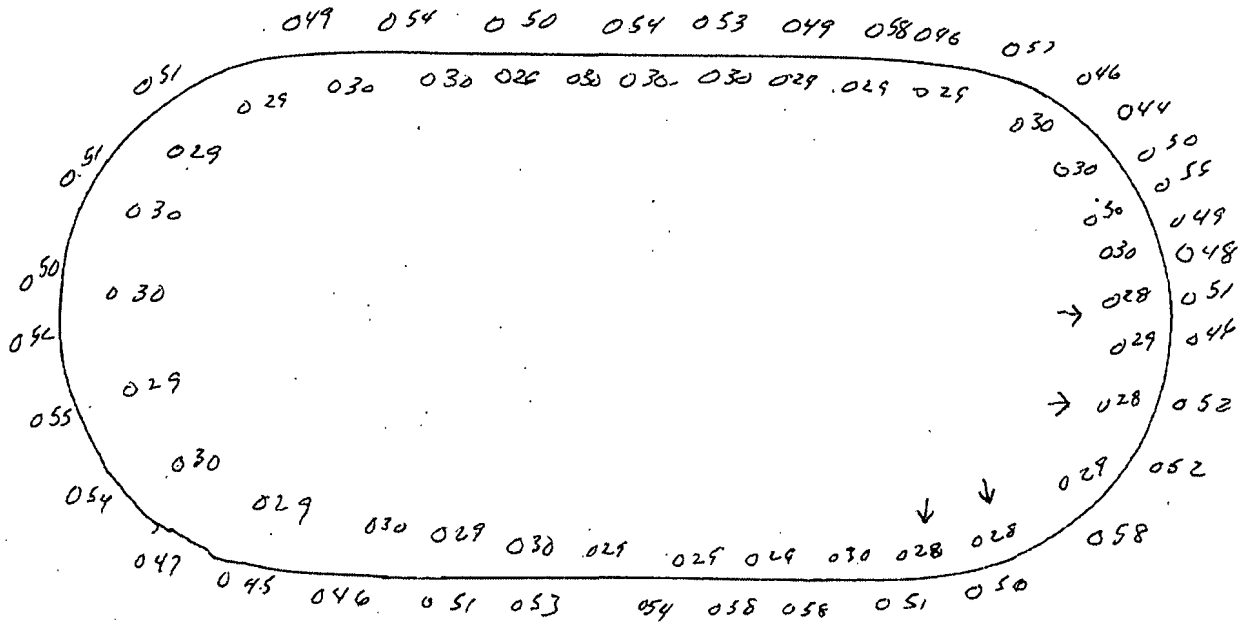

Figure 2. Thickness of Metal Remaining, Inches

The maximum amount of material removed from the lower doubler is .040 - .028 = .012 inches. This doubler is reinforced with an additional doubler per the Hawker Beechcraft, standard repair drawing number SR-KA-00029, Rev. 1. The added doubler is SR-SK-00029-1. The doubler is made from .063 inch thick 2024-T3 clad sheet. The maximum amount of material removed from the upper dish flange is .063 - .044 = .019 inches. Figure 2 shows that the maximum damage is both on the right side of the figure where .019 inch material remains on the upper dish and .012 inches remains on the lower doubler. Total material removed is .019 + .012 = .031 inches.

This repair adds an additional doubler around the circumference of the upper dish, as shown in Figure 3. The total doubler thickness added is .063 + .040 = .103 inches. The material strength of the added doublers is equal to the material strength of the existing parts.

MS(Material Shear & Tension, Equal Strength) = (.103 / .031) - 1 = **+2.32**

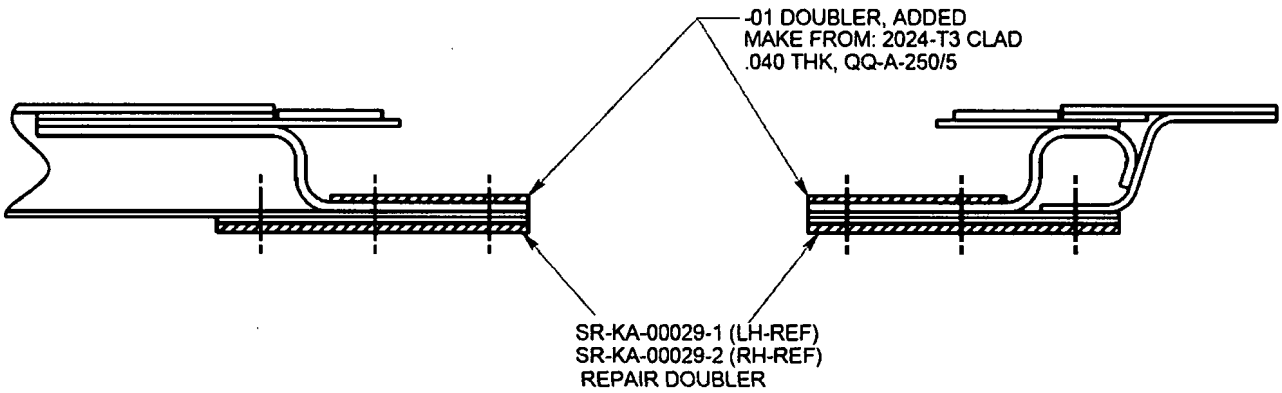

Figure 3. Added Upper Doubler

The -01 Doubler material is .040 inch thick 2024-T3 Clad sheet per QQ-A-250/5. The material properties for the Doubler material are found in reference 2 and are presented in Figure 4.

Table 3.2.4.0(e_1). Design Mechanical and Physical Properties of Clad 2024 Aluminum Alloy Sheet and Plate

Specification	AMS-QQ-A-250/5[a]							
Form	Flat sheet							
Temper	T3							
Thickness, in.	0.008-0.009		0.010-0.062		0.063-0.128		0.129-0.249	
Basis	A	B	A	B	A	B	A	B
Mechanical Properties:								
F_{tu}, ksi:								
L	59	60	60	61	62	63	63	64
LT	58	59	59	60	61	62	62	63
F_{ty}, ksi:								
L	44	45	44	45	45	47	45	47
LT	39	40	39	40	40	42	40	42
F_{cy}, ksi:								
L	36	37	36	37	37	39	37	39
LT	42	43	42	43	43	45	43	45
ST	...	...	...	...	...	...	...	...
F_{su}[b], ksi	37	37	37	38	38	39	39	40
F_{bru}[b,c], ksi:								
(e/D = 1.5)	96	97	97	99	101	102	102	104
(e/D = 2.0)	119	121	121	123	125	127	127	129

Figure 4. Material Properties for 2024-T3 Clad

The added rivets are NAS1097AD4 rivets. The shear strength of the rivet is 388 lbf, which is taken from reference 3 as shown in Figure 5.

Table 6-12a. Shear Strength of Solid Rivets (1)

NOMINAL HOLE DIAMETER (INCHES)		1/16 (.067)	3/32 (.096)	1/8 (.1285)	5/32 (.159)
RIVET MAT'L	MIN. Fsu, ksi	ULTIMATE SHEAR ST			
5056 (B)	BC 28 BK	99 440	203 903	363 1615	556 2473
2117-T3(AD) Fsu=30 ksi	BB 30 BJ	106 472	217 965	388 1726	596 2651

Figure 5. Rivet Strength

The bearing strength of the rivet in the lower doubler is critical and is calculated as:

$$Pb = 121000(.040)(.1285) = 622 \text{ lbf.}$$

The shear strength of the solid NAS1097AD4 rivet is critical. There is added one additional row of rivets around the lower, internal doubler using CR3213-4 rivets.

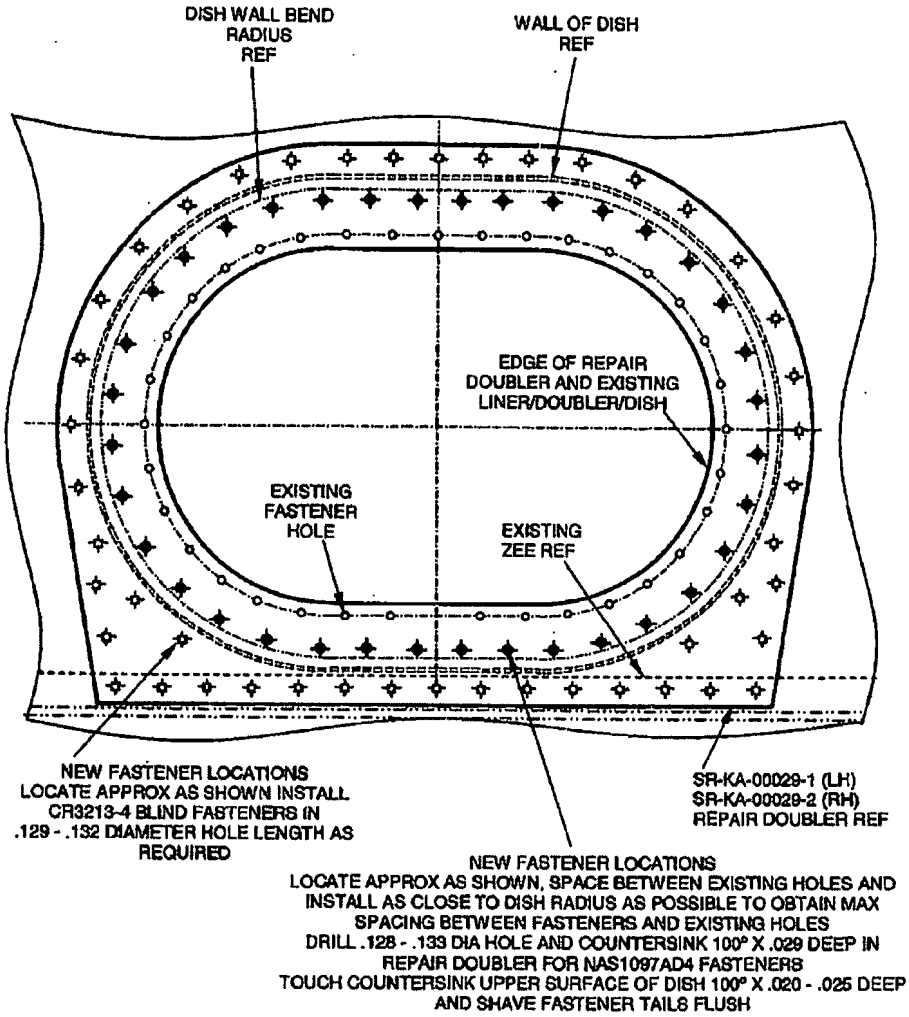

Figure 6. Fastener Layout

The loss in shear strength due to the corrosion damage is based on a cross-section damage width of 0.500 inches. The area of material removed is .500(.031) = .016 in^2. The shear strength of the material is 37 ksi per Figure 4. Conservatively the total critical loss in shear strength is .016(37000) = 574 lbf. Figure 6 shows that there is a minimum of 2 - NAS1097AD4 rivets and 2 - CR3213-4 rivets available to carry the 574 lbf into the structure.

The CR3213-4 rivets in .063 inch thick 2024-T3 clad have a shear strength of 518 lbf per Figure 7. The bearing strength of the rivet in .040 doubler is Pbr = .1285(.040)(121000) = 622 lbf. The rivets are shear critical. The shear strength of the two NAS1097AD4 rivets is (2)(388) = 776 lbf. The shear strength of the two CR3213-4 rivets is (2)(518) = 1036 lbf. Total capacity of the rivets is 776 + 1036 = 1812 lbf.

MS(Rivet Shear, Equivalent Strength) = (1812 / 574) - 1 = **+2.16**

Ultimate Static Joint Strength Loads (lbs.) per MIL-HDBK-5 Criteria

RIVET SHANK DIAM.	RIVET PART NUMBER	Universal & 100° Flush Head Aluminum Rivets in 2024-T3 Alclad Aluminum 100° Flush Head Rivets in Machine Countersunk Sheet														
		SHEET THICKNESS														
		.016	.020	.025	.032	.040	.050	.063	.071	.080	.090	.100	.125	.160	.190	.250
1/8" SOLIDS	MS 20426 AD FLUSH	—	163	221	272	309	340	363	373	388	388	388	388	388	388	388
	MS 20470 AD UNIV.	—	—	357	374	386	388	388	388	388	388	388	388	388	388	388
1/8" NOM.	CR3212 FLUSH M7885/3-4 (NAS3202B)	—	—	—	254	299	355	428	460	491	526	561	644	664	664	664
	CR 3213 UNIV. M7885/2-4 (NAS9301B)	152	206	272	342	392	454	518	538	561	586	611	664	664	664	664
1/8" O.S.	CR 3242 FLUSH M7885/7-4 (NAS9305B)	—	—	218	285	363	443	537	594	620	642	665	722	801	814	814
	CR 3243 UNIV. M7885/6-4 (NAS9304B)	187	245	319	395	451	520	610	641	667	697	726	801	814	814	814
5/32" SOLIDS	MS 20426 AD FLUSH	—	—	250	348	418	479	523	542	560	575	596	596	596	596	596
	MS 20470 AD UNIV.	—	—	—	551	575	593	596	596	596	596	596	596	596	596	596
5/32" NOM.	CR 3212 FLUSH M7885/3-5 (NAS9302B)	—	—	—	—	395	465	556	612	676	721	764	873	1005	1030	1030
	CR 3213 UNIV. M7885/2-5 (NAS9301B)	—	236	320	439	532	610	711	772	810	841	872	951	1030	1030	1030
5/32" O.S.	CR 3242 FLUSH M7885/7-5 (NAS9305B)	—	—	—	345	442	561	684	759	838	922	950	1020	1120	1205	1245
	CR 3243 UNIV. M7885/6-5 (NAS9304B)	—	288	378	506	608	694	804	873	949	987	1025	1115	1245	1245	1245

Figure 7. Shear Strength of Rivet.

This design is shown to be equal to or greater than the original design in material and fastener strength.

Sequence Number 15-143

U.S. DEPARTMENT OF TRANSPORTATION
FEDERAL AVIATION ADMINISTRATION

STATEMENT OF COMPLIANCE WITH AIRWORTHINESS STANDARDS

1. DATE: November 10, 2015

AIRCRAFT OR AIRCRAFT COMPONENT IDENTIFICATION

2. MAKE	3. MODEL NO.	4. TYPE *(Aircraft, Engine, Propeller, etc.)*	5. NAME OF APPLICANT
BEECHCRAFT	B200	AIRPLANE	North Texas Aircraft Service 4480 GLENN CURTISS DRIVE ADDISON, TX 75001

LIST OF DATA

6. IDENTIFICATION Number	Rev	Date	7. TITLE
15-143-01	IR	11/10/15	REPAIR - AUX FUEL TANK ACCESS HOLE, CORROSION
SA15-143	IR	11/10/15	STRUCTURAL ANALYSIS - CORROSION REPAIR
--END--			-- END --

Notes:
1. Limitation: This approval is valid only for Beechcraft model B200, S/N: BB-1668.***
2. The structural aspects only of the above listed data are approved herein. This approval is only for the engineering design data. It indicates the data listed above demonstrates compliance only with the regulations specified by paragraph and subparagraph listed below as "Applicable Requirements."
3. This form does constitute FAA approval of all the engineering data necessary for substantiation of compliance to necessary requirements.

-- END --

8. PURPOSE OF DATA
In support of major repair to S/N: **BB-1668**

9. APPLICABLE REQUIREMENTS *(List specific sections)* **Amendment level in brackets, [28] indicates amendment level 23-28, and [0] indicates basic rule.**

14 CFR 23.301(all)[0] 23.303[0] 23.305(a,b)[0] 23.307(a)[0] 23.321(a,b)[0] 23.341[7]
23.601[0] 23.603(a)[0] 23.605[0] 23.609(a,b)[0] 23.613(all)[0] 23.615(a,b)[7]

10. CERTIFICATION - Under authority vested by direction of the Administrator and in accordance with conditions and limitations of appointment under 14.CFR Part 183, data listed above and on attached sheets numbered N/A have been examined in accordance with established procedures and found to comply with applicable requirements of the Airworthiness Standards listed.

I (We) Therefore
- [ ] **Recommend approval of these data**
- [x] **Approve these data**

11. SIGNATURE(S) OF DESIGNATED ENGINEERING REPRESENTATIVE(S)	12. DESIGNATION NUMBER(S)	13. CLASSIFICATION(S)
Michael Lieblich	DERT-710163-SW	Structures

US Department of Transportation
Federal Aviation Administration

MAJOR REPAIR AND ALTERATION
(Airframe, Powerplant, Propeller, or Appliance)

OMB No. 2120-0020
Exp: 5/31/2018

Electronic Tracking Number

For FAA Use Only

INSTRUCTIONS: Print or type all entries. See Title 14 CFR §43.9, Part 43 Appendix B, and AC 43.9-1 (or subsequent revision thereof) for instructions and disposition of this form. This report is required by law (49 U.S.C. §44701). Failure to report can result in a civil penalty for each such violation. (49 U.S.C. §46301(a))

1. Aircraft	Nationality and Registration Mark: N214GB	Serial No.: BB-1668	
	Make: Beechcraft	Model: B200	Series:
2. Owner	Name *(As shown on registration certificate)*: GTG LLC	Address *(As shown on registration certificate)*: Address 15725 N Dallas Pkwy Ste 300; City Addison; State TEXAS; Zip 75001; Country USA	

3. For FAA Use Only

4. Type		5. Unit Identification			
Repair	Alteration	Unit	Make	Model	Serial No.
[x]	[ ]	AIRFRAME	Beechcraft	*(As described in Item 1 above)*	BB-1668
[ ]	[ ]	POWERPLANT			
[ ]	[ ]	PROPELLER			
[ ]	[ ]	APPLIANCE	Type / Manufacturer		

6. Conformity Statement

A. Agency's Name and Address	B. Kind of Agency		
Name: North Texas Aircraft Services, Inc.	[x] U. S. Certificated Mechanic	[ ] Manufacturer	
Address: 4480 Glenn Curtiss Drive	[ ] Foreign Certificated Mechanic	C. Certificate No.	
City: Addison; State: Texas	[ ] Certificated Repair Station	3690938	
Zip: 75001; Country: USA	[ ] Certificated Maintenance Organization		

D. I certify that the repair and/or alteration made to the unit(s) identified in item 5 above and described on the reverse or attachments hereto have been made in accordance with the requirements of Part 43 of the U.S. Federal Aviation Regulations and that the information furnished herein is true and correct to the best of my knowledge.

Extended range fuel per 14 CFR Part 43 App. B [ ]

Signature/Date of Authorized Individual: 11/13/15

7. Approval for Return to Service

Pursuant to the authority given persons specified below, the unit identified in item 5 was inspected in the manner prescribed by the Administrator of the Federal Aviation Administration and is [x] Approved [ ] Rejected

BY								
	[ ]	FAA Flt. Standards Inspector	[ ]	Manufacturer	[ ]	Maintenance Organization	[ ]	Persons Approved by Canadian Department of Transport
	[ ]	FAA Designee	[ ]	Repair Station	[X]	Inspection Authorization		Other *(Specify)*

Certificate or Designation No. 2885669

Signature/Date of Authorized Individual: 11-13-2015

FAA Form 337 (10/06)

NOTICE

Weight and balance or operating limitation changes shall be entered in the appropriate aircraft record. An alteration must be compatible with all previous alterations to assure continued conformity with the applicable airworthiness requirements.

8. Description of Work Accomplished
(If more space is required, attach additional sheets. Identify with aircraft nationality and registration mark and date work completed.)

N214GB	11/13/2015
Nationality and Registration Mark	Date

TT 6630.0 LDGS 8245

Completed repair to R/H Outbd Flap WS 166.7 per North Texas Aircraft Service Drawing # 15-148-01, Structural Analysis Report SA15-148 and FAA Form 8110-3 dated 11/13/2015.
//Nothing Follows//

☑ Additional Sheets Are Attached

REVISIONS			
REV	DESCRIPTION	DATE	APPROVED

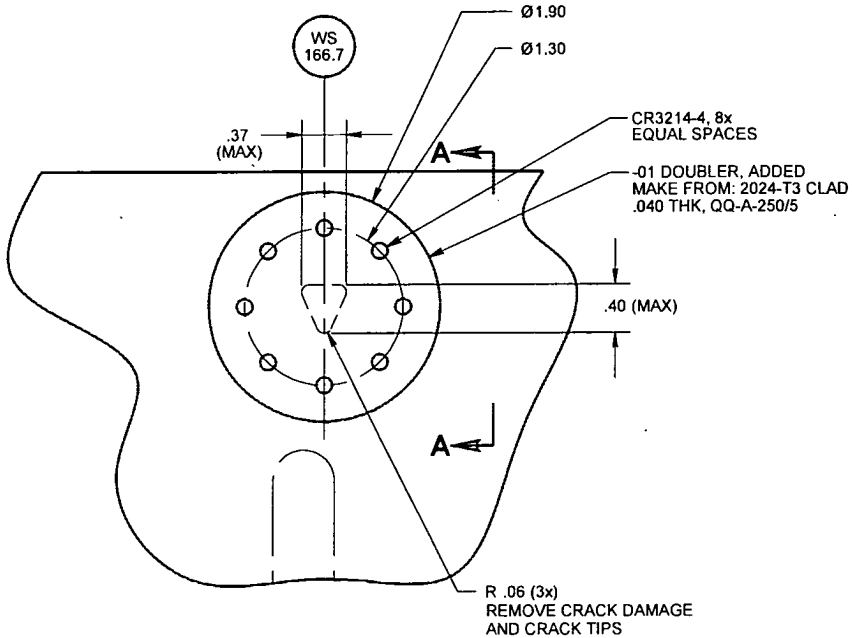

-101 FLAP REPAIR

(VIEW LKG DN AT UPPER FLAP SKIN)

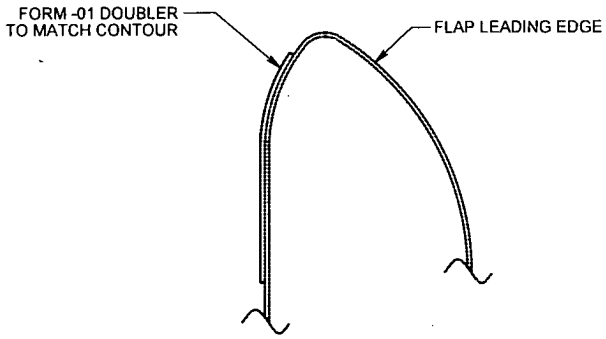

SECTION A-A

DESCREPANCY:
CRACK DAMAGE IS FOUND IN THE UPPER SKIN OF THE RH FLAP. TWO INTERSECTING CRACKS. ONE HORIZONTAL .24 INCHES. THE OTHER VERTICAL, .40 INCHES.

DISPOSITION:
1. CUTOUT CRACK DAMAGED AREA AS SHOWN. VERIFY CRACK TIPS ARE REMOVED.
2. TOUCH ALODINE THE CUT EDGE OF THE SKIN PER PS-210.
3. FAB -01 DOUBLER
4. ALODINE AND EPOXY PRIME 2 COATS THE -01 DBLR PER PS-210.
5. APPLY FAYING SURFACE SEALER, MIL-S-8802 BET FLAP & DBLR.
6. INSTALL RIVETS WHILE SEALANT IS WET PER PS-310.

PROPRIETARY NOTICE
ALL INFORMATION DISCLOSED HEREIN IS CONSIDERED PROPRIETARY AND MAY NOT BE REPRODUCED OR USED FOR ANY PURPOSE EXCEPT AS EXPRESSLY GRANTED IN WRITING BY *NORTH TEXAS AIRCRAFT SERVICE, INC.*

Tolerance Unless Otherwise Specified
.X ± .100
.XX ± .030
.XXX ± .005
angles ± 0.5 deg
Dimensions in Inches

North Texas Aircraft Service, Inc.
4480 Glenn Curtiss Drive
Addison, Texas 75001

REPAIR - RH FLAP, OUTBD CRACK, WS 166.7

MAKE	BEECHCRAFT		
MODEL	B200		
S/N:	BB-1668	DRAFTER	Michael Lieblich
N	214GB	APPROVAL	
CAGE CODE	B	DWG NO.	15-148-01
REV.	IR	Scale = 1 : 1	Date: 13 NOV 15
Sheet	1 of 1		

North Texas Aircraft Service®

STRUCTURAL ANALYSIS

REPORT NO: **SA15-148** DATE: **November 13, 2015**

FLAP CRACK REPAIR

DEPARTMENT: REPAIR STATION CHECKED BY: _____

SECTION: MECHANICAL

PREPARED BY: Michael Lieblich APPROVAL: _____

PROPRIETARY NOTICE
THIS DATA AND INFORMATION DISCLOSED HEREIN IS PROPRIETARY DATA OF NORTH TEXAS AIRCRAFT SERVICE. NEITHER THIS DATA NOR THE DATA CONTAINED HEREIN SHALL BE REPRODUCED, USED OR DISCLOSED TO OTHERS WITHOUT THE WRITTEN AUTHORIZATION OF NORTH TEXAS AIRCRAFT SERVICE.

REVISIONS

REV LTR	REV BY	APPROVAL	DATE	REVISIONS AND / OR ADDITIONS
IR	ML		11/13/15	Initial Release

INTRODUCTION

This report consists of the structural substantiation of the major repair which is defined in accordance with the following drawing;

1. 15-148-01 Repair - RH Flap, Outbd Crack, WS 166.7

REFERENCES

1. 14 CFR Part 23 current revision level.
2. MMPDS-06, "Metallic Materials Properties Development and Standardization (MMPDS)," dated April 2011, FAA.
3. E-Systems Structures Manual.

LOADS

Loads are based on equivalent strength analysis, for this major repair. The loss in strength due to the installation is compensated by use of a reinforcing doubler, or equivalent materials which maintains the material stress levels at or below the original design levels.

CERTIFICATION BASIS

This airplane is a Beechcraft model B200, serial number BB-1668. The certification basis for this model airplane is presented in the Type Certification Data Sheet number A24CE. The certification basis is;

Certification Basis (Model 200 Series)	FAR Part 23, effective February 1, 1965, as amended by 23-1 through 23-9, Amendment 23-11, FAR Paragraphs 23.175 and associated FARs 23.143(a), 23.145(d), 23.153, 23.161(c)(3), and 23.173(a) as amended by Amendment 23-14; FAR 23.951(c) and FAR 23.997(d) as amended by Amendment 23-15 (A200CT and B200 series, only); FAR 23.1545(a) as amended by Amendment 23-23 and FAR 23.1325(e) as amended by Amendment 23-20 (B200 Series only); FAR 23.1305(n), 23.1529 as amended by Amendment 23-26; FAA Special Conditions 23-47-CE-5 issued October 30, 1972, Amendment 1 dated December 18, 1973, and Amendment 2 dated January 12, 1979; FAR Paragraphs 25.929 and 25.1419 of FAR Part 25 as amended to December 31, 1972, and FAR 25.831(d) through Amendment 25-41 (For all Model 200 and B200 series aircraft approved for 35,000 feet); SFAR 27 through

This analysis will use the 14CFR Part 23 rules at amendment level 23-11.

ANALYSIS

REPAIR - RH FLAP, OUTBD CRACK, WS 166.7 ***15-148-01***

The outboard leading edge of the right hand side flap is found to have to intersecting cracks. One is horizontal (spanwise). The horizontal crack is .24 inches in length and centered at WS 166.7. The second begins at the outboard-point of the horizontal crack and runs aft for a distance of .40 inches.. A photograph of the damage is presented in the Figure 1.

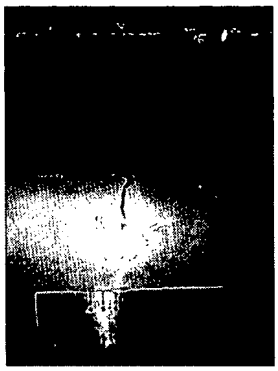

Figure 1. Existing Crack Damage

The crack damaged area is removed and a doubler is installed to strengthen the flap skin. The repair design is shown in Figure 2.

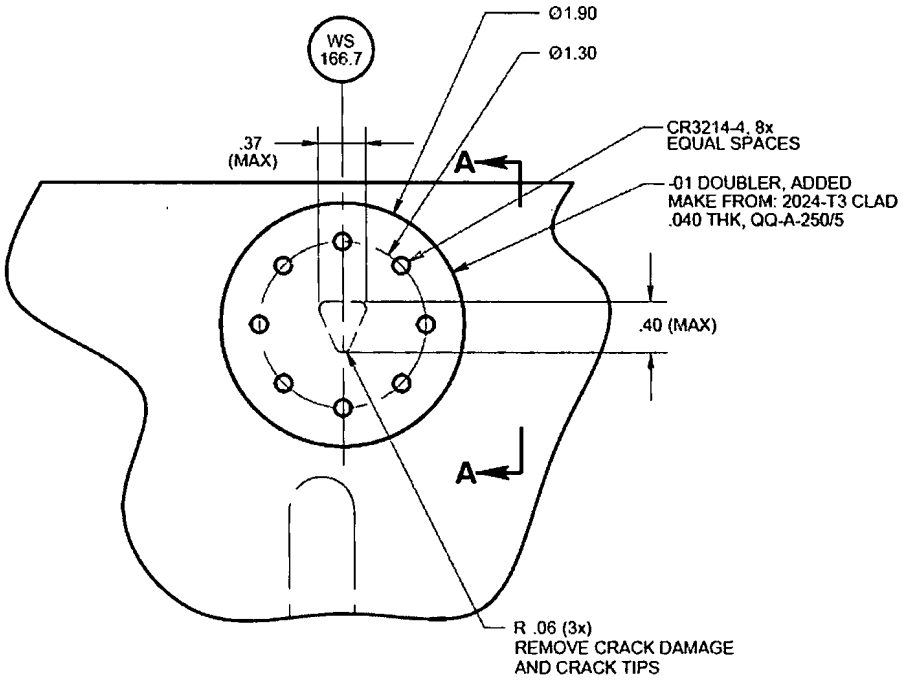

Figure 2. Crack Damage Repair.

The flap skin is .025 inches thick and is made from 2024-T3 Clad material. The material properties are shown in Figure 3.

Table 3.2.4.0(e_1). Design Mechanical and Physical Properties of Clad 2024 Aluminum Alloy Sheet and Plate

Specification	AMS-QQ-A-250/5[a]							
Form	Flat sheet							
Temper	T3							
Thickness, in.	0.008-0.009		0.010-0.062		0.063-0.128		0.129-0.249	
Basis	A	B	A	B	A	B	A	B
Mechanical Properties:								
F_{tu}, ksi:								
L	59	60	60	61	62	63	63	64
LT	58	59	59	60	61	62	62	63
F_{ty}, ksi:								
L	44	45	44	45	45	47	45	47
LT	39	40	39	40	40	42	40	42
F_{cy}, ksi:								
L	36	37	36	37	37	39	37	39
LT	42	43	42	43	43	45	43	45
ST	...	...	...	...	...	...	...	...
F_{su}[b], ksi	37	37	37	38	38	39	39	40
F_{bru}[b,c], ksi:								
(e/D = 1.5)	96	97	97	99	101	102	102	104
(e/D = 2.0)	119	121	121	123	125	127	127	129

Figure 3. Material Properties for 2024-T3 Clad

The maximum length of material removed is .40 inches. The ultimate strength of the skin lost due to the crack is:

$$P = (.025)(.40)(60000) = 600 \text{ lbf}$$

The added rivets are CR3214-4AD4 rivets. The shear strength of the rivet is 254 lbf, which is taken from MIL-HDBK-5 data as shown in Figure 4.

Ultimate Static Joint Strength Loads (lbs.) per MIL-HDBK-5 Criteria

RIVET SHANK DIAM.	RIVET PART NUMBER	Universal & 100° Flush Head Aluminum Rivets in 2024-T3 Alclad Aluminum; 100° Flush Head Rivets in Machine Countersunk Sheet; SHEET THICKNESS														
		.016	.020	.025	.032	.040	.050	.063	.071	.080	.090	.100	.125	.160	.190	.250
1/8" SOLIDS	MS 20426 AD FLUSH	—	163	221	272	309	340	363	373	388	388	388	388	388	388	388
	MS 20470 AD UNIV.	—	—	357	374	386	388	388	388	388	388	388	388	388	388	388
1/8" NOM.	CR3212 FLUSH M7885/3-4 (NAS3202B)	—	—	—	254	299	355	428	460	491	526	561	644	664	664	664
	CR 3213 UNIV. M7885/2-4 (NAS9301B)	152	206	272	342	392	454	518	538	561	586	611	664	664	664	664

Figure 4. CR3212-4 Rivet Shear Strength.

The shear strength allowable shown in Figure 4 is acceptable because the CR3213-4 rivet has a standard countersink. The CR3214-4 rivet which was used to prevent a knife edge condition will have a higher shear strength because the knife edge condition doesn't exist. Machine countersink rivet shear strength per Ref. 3, Table 6-14 is shown in Figure 5.

Table 6-14. Joint Strength of Solid 100° Flush Head Aluminum (4) Alloy Rivets in Machine Countersunk Aluminum Alloy Sheet									
SHEET MATERIAL	CLAD 2024-T42 AND HIGHER STRENGTH ALUMINUM ALLOYS (2)								
RIVET MATERIAL	2117-T3 (AD)				2017-T3 (D)			2024-T31 (DD)	
RIVET NOM. DIA. (IN.)	3/32	1/8	5/32	3/16	5/32	3/16	1/4	3/16	1/4
ULTIMATE STRENGTH ~ LBS.(NEWTONS)									
.020	132 587	163 (1) 725							
.032	178 792	272 1210	348 (1) 1548					324 (1) 1441	
.040	193 859	309 1375	418 (1) 1859	525 (1) 2335	476 (1) 2117			555 (1) 2469	

Figure 5. NAS1097AD4 rivet shear strength.

The bearing strength of the rivet in the flap skin is critical and is calculated as:

$$Pb = 121000(.025)(.1285) = 389 \text{ lbf.}$$

The shear strength of the solid CR3214-4 rivet is critical. This analysis will use the lower value of 254 lbf shown in Figure 4. There is 4 rivets on each side of the damage. The ultimate shear strength of the rivets is 4(254) = 1061 lbf.

MS(Rivet Shear, Equivalent Strength) = (1061 / 600) - 1 = **+0.77**

The minimum doubler area is:

$$A(min) = .032[1.9 - 2(.1285)] = .0526 \text{ in2}$$

The ultimate strength of the doubler is F = .0526(60000) = 3155 lbf

MS(Doubler Strength, Equivalent Strength) = (3155 / 600) - 1 = **+4.26**

This design is shown to be equal to or greater than the original design in material and fastener strength.

FATIGUE

The total skin thickness in the repaired area has gone from .025 inches thick to .025 + .032 = .057 inches thick. The two parts are also sealed together using MIL-S-8802 sealant. Fatigue life is improved over the existing skin.

Sequence Number 15-148

U.S. DEPARTMENT OF TRANSPORTATION
FEDERAL AVIATION ADMINISTRATION

STATEMENT OF COMPLIANCE WITH AIRWORTHINESS STANDARDS

1. DATE: November 13, 2015

AIRCRAFT OR AIRCRAFT COMPONENT IDENTIFICATION

2. MAKE	3. MODEL NO.	4. TYPE *(Aircraft, Engine, Propeller, etc.)*	5. NAME OF APPLICANT
BEECHCRAFT	B200	AIRPLANE	North Texas Aircraft Service 4480 GLENN CURTISS DRIVE ADDISON, TX 75001

LIST OF DATA

6. IDENTIFICATION Number	Rev	Date	7. TITLE
15-148-01	IR	11/13/15	REPAIR - RH FLAP, OUTBD CRACK, WS 166.7
SA15-148	IR	11/13/15	STRUCTURAL ANALYSIS - FLAP CRACK REPAIR
--END--			-- END --

Notes:
1. Limitation: This approval is valid only for Beechcraft model B200, S/N: BB-1668.***
2. The structural aspects only of the above listed data are approved herein. This approval is only for the engineering design data. It indicates the data listed above demonstrates compliance only with the regulations specified by paragraph and subparagraph listed below as "Applicable Requirements."
3. This form does constitute FAA approval of all the engineering data necessary for substantiation of compliance to necessary requirements.

-- END --

8. PURPOSE OF DATA
In support of major repair to S/N: **BB-1668**

9. APPLICABLE REQUIREMENTS *(List specific sections)*) Amendment level in brackets, [28] indicates amendment level 23-28, and [0] indicates basic rule.

14 CFR 23.301(all)[0] 23.303[0] 23.305(a,b)[0] 23.307(a)[0] 23.321(a,b)[0] 23.341[7]
23.601[0] 23.603(a)[0] 23.605[0] 23.609(a,b)[0] 23.613(all)[0] 23.615(a,b)[7]

10. CERTIFICATION - Under authority vested by direction of the Administrator and in accordance with conditions and limitations of appointment under 14.CFR Part 183, data listed above and on attached sheets numbered N/A have been examined in accordance with established procedures and found to comply with applicable requirements of the Airworthiness Standards listed.

I (We) Therefore
- [ ] **Recommend approval of these data**
- [X] **Approve these data**

11. SIGNATURE(S) OF DESIGNATED ENGINEERING REPRESENTATIVE(S)	12. DESIGNATION NUMBER(S)	13. CLASSIFICATION(S)
Michael Lieblich	DERT-710163-SW	Structures

New

UNITED STATES OF AMERICA
DEPARTMENT OF TRANSPORTATION—FEDERAL AVIATION ADMINISTRATION

STANDARD AIRWORTHINESS CERTIFICATE

1 NATIONALITY AND REGISTRATION MARKS	2 MANUFACTURER AND MODEL	3 AIRCRAFT SERIAL NUMBER	4 CATEGORY
N214GB	RAYTHEON AIRCRAFT COMPANY B200	BB-1668	NORMAL

5 AUTHORITY AND BASIS FOR ISSUANCE

This airworthiness certificate is issued pursuant to the Federal Aviation Act of 1958 and certifies that, as of the date of issuance, the aircraft to which issued has been inspected and found to conform to the type certificate therefor, to be in condition for safe operation, and has been shown to meet the requirements of the applicable comprehensive and detailed airworthiness code as provided by Annex 8 to the Convention on International Civil Aviation, except as noted herein.
Exceptions:

NONE

6 TERMS AND CONDITIONS

Unless sooner surrendered, suspended, revoked, or a termination date is otherwise established by the Administrator, this airworthiness certificate is effective as long as the maintenance, preventative maintenance, and alterations are performed in accordance with Parts 21, 43, and 91 of the Federal Aviation Regulations, as appropriate, and the aircraft is registered in the United States.

DATE OF ISSUANCE	FAA REPRESENTATIVE	DESIGNATION NUMBER
R-07-30-99 A12-18-99	THOMAS J. TUCKER	SW-FSDO-05

Any alteration, reproduction, or misuse of this certificate may be punishable by a fine not exceeding $1,000, or imprisonment not exceeding 3 years or both. THIS CERTIFICATE MUST BE DISPLAYED IN THE AIRCRAFT IN ACCORDANCE WITH APPLICABLE FEDERAL AVIATION REGULATIONS.

FAA Form 8100-2 (8-82) ★ U.S. GPO: 1989—662-877

Old

UNITED STATES OF AMERICA
DEPARTMENT OF TRANSPORTATION—FEDERAL AVIATION ADMINISTRATION

STANDARD AIRWORTHINESS CERTIFICATE

1. NATIONALITY AND REGISTRATION MARKS	2 MANUFACTURER AND MODEL	3 AIRCRAFT SERIAL NUMBER	4 CATEGORY
N6WU	RAYTHEON AIRCRAFT COMPANY B200	BB-1668	NORMAL

5. AUTHORITY AND BASIS FOR ISSUANCE

This airworthiness certificate is issued pursuant to the Federal Aviation Act of 1958 and certifies that, as of the date of issuance, the aircraft to which issued has been inspected and found to conform to the type certificate therefor, to be in condition for safe operation, and has been shown to meet the requirements of the applicable comprehensive and detailed airworthiness code as provided by Annex 8 to the Convention on International Civil Aviation, except as noted herein.
Exceptions:

NONE

6. TERMS AND CONDITIONS

Unless sooner surrendered, suspended, revoked, or a termination date is otherwise established by the Administrator, this airworthiness certificate is effective as long as the maintenance, preventative maintenance, and alterations are performed in accordance with Parts 21, 43, and 91 of the Federal Aviation Regulations, as appropriate, and the aircraft is registered in the United States.

DATE OF ISSUANCE	FAA REPRESENTATIVE	DESIGNATION NUMBER
07-30-99 A12-18-99	Robert Alliband	DOA, PC#8

Any alteration, reproduction, or misuse of this certificate may be punishable by a fine not exceeding $1,000, or imprisonment not exceeding 3 years, or both. THIS CERTIFICATE MUST BE DISPLAYED IN THE AIRCRAFT IN ACCORDANCE WITH APPLICABLE FEDERAL AVIATION REGULATIONS.

FAA Form 8100-2 (8-82) ☆ U.S. GOVERNMENT PRINTING OFFICE: 1991 - 668-228

U.S Department of Transportation
Federal Aviation Administration

MAJOR REPAIR AND ALTERATION
(Airframe, Powerplant, Propeller, or Appliance)

Form Approved
OMB No. 2120-0020

For FAA Use Only

Office Identification

INSTRUCTIONS: Print or type all entries. See FAR 43.9, FAR 43 Appendix B, and AC 43.9-1 (or subsequent revision thereof) for instructions and disposition of this form. This report is required by law (49 U.S.C. 1421). Failure to report can result in a civil penalty not to exceed $1,000 for each such violation (Section 901 Federal Aviation Act 1958)

1. Aircraft	Make Beech	Model B200
	Serial No. BB-1668	Nationality and Registration Mark USA N6WU
2. Owner	Name *(As shown on registration certificate)* Thyssen Aviation LLC GTG LLC Quorum Dr.	Address *(As shown on registration certificate)* 14901 Quorum Dr. Ste 300 Dallas TX 75254-6735

3. For FAA Use Only

4. Unit Identification				**5. Type**	
Unit	Make	Model	Serial No.	Repair	Alteration
AIRFRAME	~~~~~~~~~~~~~~~~~~~~~~~~~~*(As described in item 1 above)*~~~~~~~~~~~~~~~~~~~~~~~~~~			☐	☒
POWERPLANT				☐	☐
PROPELLER				☐	☐
APPLIANCE	Type			☐	☐
	Manufacturer			☐	☐

6. Conformity Statement

A. Agency's Name and Address	B. Kind of Agency	C. Certificate No.
Dallas Aircraft Services 5555 Apollo Drive, Dallas Exec. Airport, Dallas, TX 75237	☐ U.S. Certified Mechanic ☐ Foreign Certified Mechanic ☒ Certified Repair Station ☐ Manufacturer	CRS D0FR289Y Radio Class I, II Limited Radio Class III

D. I certify that the repair and/or alteration made to the unit(s) identified in item 4 above and described on the reverse or attachments hereto have been made in accordance with the requirements of Part 43 of the U.S. Federal Aviation Regulations and that the information furnished herein is true and correct to the best of my knowledge.

Date	Signature of Authorized Individual
12-3-2007	Dennis F. Sorber

7. Approval for Return to Service

Pursuant to the authority given persons specified below, the unit identified in item 4 was inspected in the manner prescribed by the Administrator of the Federal Aviation Administration and is ☐ APPROVED ☐ REJECTED

BY						
	☐	FAA Flt Standards Inspector	☐	Manufacturer	☐	Inspection Authorization
	☐	FAA Designee	☒	Repair Station	☐	Person Approved by Transport Canada Airworthiness Group

Other *(Specify)*

Date of Approval or Rejection	Certificate or Designation No.	Signature of Authorized Individual
12-3-2007	CRS D0FR289Y	Dennis F. Sorber

NOTICE

Weight and balance or operating limitation changes shall be entered in the appropriate aircraft record. An alteration must be compatible with all previous alterations to assure continued conformity with the applicable airworthiness requirements.

8. Description of Work Accomplished

(If more space is required, attach additional sheets. Identify with aircraft nationality and registration mark and date work completed.)

N6WU Beech King Air B200 S/N BB-1668 WO# 71493A

Removed Equipment:

1) Collins IND-270 Radar Display P/N 822-0416-001 at F.S. 105.0

Installed Equipment

1) Avidyne EX-500 Multifunction Display P/N 850-00010-826 at F.S. 105.0
2) Heads Up XM Weather Datalink Receiver P/N XMD076-01 at F.S. 57.0
3) Heads Up XM Antenna P/N CI420-1 at F.S. 138

Installed Avidyne EX-500 Multifunction display and Heads Up XM Weather Datalink Reciever system IAW STC# SA00161BO with reference to Avidyne EX-500 Multifunction Display Installation Manual P/N 600-00079-000 Rev. 06 and Heads Up XMD076 XM WX Datalink Receiver Installation Manual P/N XMD076-3 Rev. D dated 04/05/06.

All affected systems were operationally checked with no discrepancies noted. System checks were completed IAW Manufacturers installation instructions.

Instructions for Continued Airworthiness document # AVMFD-083 Rev. 05 dated 10-15-2004 approved via this STC was inserted into the aircraft records.

Ground checks were completed on 12-1-2007 IAW Avidyne EX-500 Installation Manual P/N 600-00079-000 Rev. 6 with all checks being satisfactory.

All affected systems were tested accordingly to show compliance with 14 CFR 23.301, .601, .603, .605, .607, .609, .611, .613, .771, .777, .867, .1301,.1303, .1307, .1309, .1311, .1321, .1322, .1357, .1367, .1381, .1397, .1529, .1541, .1543, .1555 and .1557

An Electrical Load Analysis was performed in accordance with AC 43.13-1B, Chapter 11, Paragraph 11-36.

FAA Approved Flight Manual Supplement dated 9-05-2003 (Avidyne Document #600-00083-000 Original Issue) was installed into Aircraft Flight Manual and is required to be onboard and available to the pilot for operation of this system.

Weight and Balance Data and Equipment List was updated and entered into the Aircraft Flight Manual

----------End----------

☐ Additional Sheets Are Attached

United States Of America

Department of Transportation - Federal Aviation Administration

Supplemental Type Certificate

Number SA00161BO

This Certificate issued to Avidyne Corporation
55 Old Bedford Road
Lincoln, Massachusetts 01773

certifies that the change in the type design for the following product with the limitations and conditions therefor as specified hereon meets the airworthiness requirements of Part 23 of the Federal Aviation Regulations.

Original Product Type Certificate Number : See attached FAA Approved Model List (AML), Document No. AVMFC-076, Rev (D), dated February 08, 2005, or later FAA approved revisions for the list of approved airplane models and applicable regulations.

Make :

Model :

Description of Type Design Change:

Installation of Avidyne Corporation FlightMax 700-00007-( ) EX500 Multi-Function Display in accordance with Avidyne Corporation Master Document List, Document No. AVMFD-088, Revision 09, dated February 4, 2005, or later FAA-approved revisions.

Limitations and Conditions:

1. The FlightMax EX500 Multi-Function Display integrates with separately approved system installations. Adherence to the limitations in the appropriate Aircraft Flight Manual Supplements for those systems is mandatory.
2. Instructions for Continued Airworthiness (ICA), Avidyne Corporation Document AVMFD-083, Revision 05, dated October 15, 2004 or later FAA accepted revision shall be made available to the operator at the time of installation.
3. Compatibility of this design with previously approved modifications must be determined by the installer.

If the holder agrees to permit another person to use this certificate to alter the product, the holder shall give the other person written evidence of that permission.

This certificate and the supporting data which is the basis for approval shall remain in effect until surrendered, suspended, revoked or a termination date is otherwise established by the Administrator of the Federal Aviation Administration.

Date of application : September 10, 2002

Date reissued :

Date of issuance : February 6, 2003

Date amended : February 8, 2005

By direction of the Administrator

(Signature)

Robert G. Mann
Manager
Boston Aircraft Certification Office

(Title)

Any alteration of this certificate is punishable by a fine of not exceeding $1,000, or imprisonment not exceeding 3 years, or both.

This certificate may be transferred in accordance with FAR 21.47.

Avidyne 700-00007-XXX-() MFD Approved Model List

STC No. SA00161BO

AVIDYNE
CORPORATION

55 Old Bedford Road
Lincoln, MA 01773

FAA Approved: _____
Robert G Mann, Manager
Boston Aircraft Certification Office
Federal Aviation Administration
Burlington, MA

Log Of Revisions

Revision Number	Revised Pages	Description of Revisions	FAA Approval	Date
(-)	ALL	**Initial Release**	See Page 1 for Signature	Feb. 06, 2003
(A)	7	**Addition of New Piper Aircraft model PA-46-500TP**	R. G. Mann	March 18, 2003
(B)	5	**Addition of PA-60-602P (Aerostar 602P)**	R. G. Mann	April 4, 2003
(C)	ALL	**Addition of Diamond DA-40, Lancair LC40-550FG, LC42-550FG, Class III aircraft w/ associated Notice changes.**	R. G. Mann	September 5, 2003
(D)	4 5, 6	**Update AFMS reference** **Addition of Cessna 182T, T182T, P206-series, TP206-series, T303; correction of miscellaneous typographical errors**	R. G. Mann	FEB. 8, 2005

FAA Approved Date: FEB 0 8 2005

Table of Contents

1. Introduction 4
2. Approved Model List – Part 23 Class I and Class II 5
3. Approved Model List – Part 23 Class III 9

FAA Approved Date: FEB 0 8 2005

1. *Introduction*

This document is the FAA Approved Model List for STC No. SA00161BO for the installation of the Avidyne 700-00007-XXX-() Multi-Function Display into eligible aircraft. Revisions to the AML must be coordinated through the STC holder, and require FAA approval.

IMPORTANT NOTICE

This STC is only applicable to the 14 CFR Part 23 Class I, II, and III aircraft, as defined in Advisory Circular AC 23.1309-1C, which are listed in this AML.

When installed in Class III aircraft, an independent lightning detection and display system complying to TSO-C110a must also be installed for operations in IMC and FAA Approved Flight Manual Supplement, Document 600-00083-001 Rev (A), or later FAA approved revision is required and must be carried aboard the aircraft during all flights.

Installation in 14 CFR Part 23 Class IV, Part 25, Part 27 and Part 29 aircraft are not authorized under this STC.

FAA Approved Date: FEB 0 8 2005

2. Approved Model List – Part 23 Class I and Class II

Aircraft Make	Aircraft Model(s)	Type Certificate Number	Certification Basis
Aerostar Aircraft Corporation	PA-60-600 (Aerostar 600), PA-60-601 (Aerostar 601), PA-60-601P (Aerostar 601P), PA-60-602P (Aerostar 602P)	A17WE	14 CFR Part 23
Alexandria Aircraft	14-19,. 14-19-2, 14-19-3, 14-19-3A, 17-30, 17-31, 17-31TC	1A3	CAR 3
	17-30A, 17-31A, 17-31ATC	A18CE	14 CFR Part 23
Cessna Aircraft Company	140A	5A2	CAR 3
	150, 150A, 150B, 150C, 150D, 150E, 150F, 150G, 150H, 150J, 150K, 150L, A150L, 150M, A150K, A150M 152, A152	3A19	CAR 3
	170, 170A, 170B	A-799	CAR 3
	172, 172A, 172B, 172C, 172D, 172E, 172F, 172G, 172H, 172I, 172K, 172L, 172M, 172N, 172P, 172Q, 172R, 172S,	3A12	CAR 3, 14 CFR Part 23
	172RG, P172D, R172E, R172F, R172G, R172H, R172J, R172K 175, 175A, 175B, 175C	3A17	CAR 3
	177, 177A, 177B	A13CE	14 CFR Part 23
	177RG	A20CE	14 CFR Part 23
	180, 180A, 180B, 180C, 180D, 180E, 180F, 180G, 180H, 180J, 180K	5A6	CAR 3
	182, 182A, 182B, 182C, 182D, 182E, 182F, 182G, 182H, 182J, 182K, 182L, 182M, 182N, 182P, 182Q, 182R, 182S, 182T, R182, T182, T182T, TR182	3A13	CAR 3, 14 CFR Part 23
	185, 185A, 185B, 185C, 185D, 185E, A185E, A185F	3A24	CAR 3
	190 195, 195A, 195B	A-790	CAR 3
	206, 206H, P206, P206A, P206B, P206C, P206D, P206E, TP206A, TP206B, TP206C, TP206D, TP206E, TU206A, TU206B, TU206C, TU206D, TU206E, TU206F, TU206G, T206H, U206, U206A, U206B, U206C, U206D, U206E, U206F, U206G	A4CE	CAR 3, 14 CFR Part 23

FAA Approved Date: FEB 0 8 2005

Aircraft Make	Aircraft Model(s)	Type Certificate Number	Certification Basis
Cessna Continued	207, 207A, T207, T207A	A16CE	14 CFR Part 23
	210, 210A, 210B, 210C, 210D, 210E, 210F, 210G, 210H, 210J, 210K, 210L, 210M, 210N, 210R, 210-5 (205), 210-5A (205A), P210N, P210R, T210F, T210G, T210H, T210J, T210K, T210L, T210M, T210N, T210R	3A21	CAR 3
	T303	A34CE	14 CFR Part 23
	310, 310A (USAF U-3A), 310B, 310C, 310D, 310E (USAF U-3B), 310F, 310G, 310H, 310I, 310J, 310J-1, 310K, 310L, 310N, 310P, E310H, E310J, T310P, 310Q, T310Q, 310R, T310R	3A10	CAR 3
	320, 320-1, 320A, 320B, 320C, 320D, 320E, 320F 340, 340A, 335, 340, 340A	3A25	CAR 3
	336	A2CE	CAR 3
	337, 337A (USAF O2B), 337B, 337C, 337D, 337E, 337F, 337G, 337H, M337B (USAF O2A), P337H, T337B, T337C, T337D, T337E, T337F, T337G, T337H, T337H-SP	A6CE	CAR 3, 14 CFR Part 23
Commander Aircraft	112, 114, 112TC, 112B, 112TCA, 114A, 114B, 114TC	A12SO	CAR 3
de Havilland Inc.	DHC-2 Mk. I, DHC-2 Mk. II, DHC-2 Mk. III	A-806	CAR 3
Diamond Aircraft Industries	DA 20-A1, DA20-C1	TA4CH	14 CFR Part 23
	DA40	A47CE	14 CFR Part 21, 14 CFR Part 23
Maule Aerospace Technology, Inc.	Bee Dee M-4, M-5-180C, MXT-7-160, M-4, M-5-200, MX-7-180A, M-4C, M-5-210C, MXT-7-180, M-4S, M-5-210TC, MX-7-180B, M-4T, M-5-220C, MXT-7-420, M-4-180C, M-5-235C, M-7-235B, M-4-180S, M-6-180, M-7-235A, M-4-180T, M-6-235, M-7-235C M-4-210 M-7-235 MX-7-180C, M-4-210C, MX-7-235, M-7-260, M-4-210S MX-7-180 MT-7-260, M-4-210T, MX-7-420, M-7-260C, M-4-220, MXT-7-180, M-7-420AC, M-4-220C, MT-7-235, MX-7-160C, M-4-220S, M-8-235, MX-7-180AC, M-4-220T, MX-7-160	3A23	CAR 3

FAA Approved Date: FEB 0 8 2005

Aircraft Make	Aircraft Model(s)	Type Certificate Number	Certification Basis
Mooney Aircraft Corp.	M20, M20A, M20B, M20C, M20D, M20E, M20F, M20G, M20J, M20K, M20L, M20M, M20R, M20S	2A3	CAR 3
	M22	A6SW	CAR 3
Partenavia Costruzioni Aeronauticas S.p.A.	P 68, P 68B, P 68C, P 68C-TC, P 68 "OBSERVER", AP68 TP series 300, P68TC "OBSERVER", AP68TP 600, P68 "OBSERVER 2"	A31EU	14 CFR Part 23
The Lancair Company	LC40-550FG, LC42-550FG	A00003SE	14 CFR Part 23
The New Piper Aircraft, Inc.	PA-28-160, PA-28-150, PA-28-180, PA-28S-160, PA-28S-180, PA-28-235, PA-28-140 2 PCLM, PA-28-140 4 PCLM, PA-28R-180, PA-28R-200, PA-28R-200, PA-28-180, PA-28-235, PA-28-151, PA-28-181, PA-28-181, PA-28-161, PA-28-161, PA-28-161, PA-28R-201, PA-28R-201T, PA-28-236, PA-28RT-201, PA-28RT-201, PA-28RT-201T, PA-28-201T	2A13	CAR 3
	PA-32-260, PA-32-300, PA-32S-300, PA-32R-300, PA-32RT-300, PA-32RT-300T, PA-32R-301, PA-32R-301, PA-32R-301T, PA-32-301, PA-32-301T, PA-32R-301T	A3SO	CAR 3
	PA-23, PA-23-160, PA-23-250 (Navy UO-1), PA-23-235, PA-E23-250, PA-23-250	1A10	CAR 3
	PA-30, PA-39, PA-40	A1EA	CAR 3
	PA-24-250, PA-24-260, PA-24-400	1A15	CAR 3
	PA-34-200, PA-34-200T, PA-34-220T, PA-34-220T, PA-34-220T	A7SO	CAR 3
	PA-44-180, PA-44-180, PA-44-180T	A19SO	14 CFR Part 23
	PA-38-112	A18SO	14 CFR Part 23
	PA-46-310P, PA-46-350P, PA-46-500TP	A25SO	14 CFR Part 23

FAA Approved Date: FEB 0 8 2005

Aircraft Make	Aircraft Model(s)	Type Certificate Number	Certification Basis
Raytheon Aircraft Company	19A, B23, B19, C23, M19A, A24, 23 A24R, A23, B24R, A23A, C24R, A23-19, A23-24	A1CE	CAR 3
	H35, J35, K35, M35, 35-33, N35, 35-A355, 35-B33, P35, S35, 35-C33, E33, F33, V35, V35A, V35B, 35-C33A, E33A, E33C, 36, A36, F33A, F33C, G33, A36TC, B36TC	3A15	CAR 3
	95, B95, 95-55 and 95-A55, B95A, D95A and E95, 95-B55 and 95-B55A, 95-B55B, 95-C55, D55, 95-C55A, D55A, E55 and E55A, 56TC and A56TC, 58 and 58A	3A16	CAR 3
	58P and 58PA, 58TC and 58TCA	A23CE	14 CFR Part 23
	50 (L-23A), B50 (L-23B)	5A4	CAR 3
REVO, Incorporated	Colonial C-1, Colonial C-2, Lake LA-4, LA-4A, LA-4P, Lake LA-4-200, Lake 250	1A13	CAR 3, 14 CFR Part 23
SOCATA - Groupe AEROSPATIALE	TB 20, TB 10, TB 21, TB9, TB 200	A51EU	14 CFR Part 23
Tiger Aircraft (American General)	AA-1, AA-1A, AA-1B, AA-1C	A11EA	14 CFR Part 23
	AA-5, AA-5A, AA-5B, AG-5B	A16EA	14 CFR Part 23
Twin Commander	500, 520, 560, 560-A	6A1	CAR 3

FAA Approved Date: FEB 0 8 2005

3. Approved Model List – Part 23 Class III

Aircraft Make	Aircraft Model(s)	Type Certificate Number	Certification Basis
Aerostar Aircraft Corporation	PA-60-700P (Aerostar 700P)	A17WE	14 CFR Part 23
Cessna Aircraft Company	208, 208A, 208B	A37CE	14 CFR Part 23
	401, 401A, 401B, 402, 402A, 402B, 402C, 411, 411A, 414, 414A, 421, 421A, 421B, 421C, 425	A7CE	CAR3
	404, 406	A25CE	14 CFR Part 23
	441	A28CE	14 CFR Part 23
	501, 551	A27CE	14 CFR Part 23
	525, 525A	A1W1	14 CFR Part 23
De Havilland Inc.	(Twin Otter) DHC-6-1, DHC-6-100, DHC-6-200, DHC-6-300	A9EA	CAR3
Fairchild	SA26-T, SA26-AT, SA226-T, SA226-AT, SA226-T(B), SA227-AT, SA227-TT	A5SW	CAR3
	SA-226-TC, SA227-AC (C-26A), SA227-BC (C-26A), SA227-PC	A8SW	14 CFR Part 23
	SA227-CC, SA227-DC	A18SW	14 CFR Part 23
Learjet	23	A5CE	CAR3
Mitsubishi Heavy Industries, Ltd.	MU-2B, MU-2B-10, MU-2B-20, MU-2B-15, MU-2B-30, MU-2B-35, MU-2B-25, MU-2B-36, MU-2B-26	A2PC	CAR 3
	MU-2B-25, MU-2B-35, MU-2B-26, MU-2B-36, MU-2B-26A, MU-2B-36A, MU-2B-40, MU-2B-60	A10SW	CAR 3
Partenavia Costruzioni Aeronauticas S.p.A.	"SPARTACUS", AP68TP 600 "VIATOR", VA300	A31EU	14 CFR Part 23
Piaggio Aero Industries S.p.A.	P-180	A59EU	14 CFR Part 23
Pilatus Aircraft Limited	PC-12, PC-12/45	A78EU	14 CFR Part 23

FAA Approved Date: FEB 0 8 2005

Aircraft Make	Aircraft Model(s)	Type Certificate Number	Certification Basis
	PC-6, PC-6-H1, PC-6-H2, PC-6/350, PC-6/350-H1, PC-6/350-H2, PC-6/A, PC-6/A-H1, PC-6/A-H2, PC-6/B-H2, PC-6/B1-H2, PC-6/B2-H2, PC-6/B2-H4, PC-6/C-H2, PC-6/C1-H2	7A15	CAR3
The New Piper Aircraft, Inc.	PA-31, PA-31-300, PA-31-325, PA-31-350	A20SO	CAR3
	PA-31P, PA-31T, PA-31T1, PA-31T2, PA-31T3, PA-31P-350	A8EA	CAR3
	PA-42, PA-42-720, PA-42-720R, PA-42-1000	A23SO	14 CFR Part 23
Raytheon Aircraft Company	200 (A100-1 (U-21J)), 200C, 200CT, 200T, A200 (C-12A) or (C-12C), A200C (UC-12B), A200CT (C-12D) or (FWC-12D) or (RC-12D) or (C-12F) or (RC-12G) or (RC-12H) or (RC-12K) or (RC-12P) B200, B200C (C-12F) or (UC-12F) or (UC-12M), or (C-12R), B200CT, B200T, 300, B300, B300C, 300LW, 1900, 1900C (C-12J), 1900D	A24CE	14 CFR Part 23
	A100 (U-21F), A100A, A100C, B100	A14CE	14 CFR Part 23
	F90	A31CE	14 CFR Part 23
	E50 (L-23D, RL-23D), C50, F50, D50 (L-23E), G50, D50A H50, D50B, J50, D50C, D50E, D50E-5990	5A4	CAR 3
	60, A60, B60	A12CE	14 CFR Part 23
	65, 65-A90-1, A65, 65-A90-2, A65-8200, 65-A90-3, 65-80, 65-A90-4, 65-A80, 65-A80-8800, 65-B80, 65-88, 65-90, 65-A90, 70, B90, C90, C90A, E90, H90	3A20	CAR3, 14 CFR Part 23
SOCATA - Groupe AEROSPATIALE	TBM 700	A60EU	14 CFR Part 23
Twin Commander	560-F, 681, 680, 690, 680E, 685, 680F, 690A, 720, 690B, 680FL, 690C, 680FL(P), 690D, 680T, 695, 680V, 695A, 680W, 695B	2A4	CAR 3
	500-A, 500-B, 500-U, 560-E, 500-S	6A1	CAR 3
	700	A12SW	14 CFR Part 23

FAA Approved Date: FEB 0 8 2005

US Department of Transportation
Federal Aviation Administration

MAJOR REPAIR AND ALTERATION
(Airframe, Powerplant, Propeller, or Appliance)

Form Approved
OMB No. 2120-0020

For FAA Use Only

Office Identification
NE-FSDO-05

INSTRUCTIONS: Print or type all entries. See FAR 43.9, FAR 43 Appendix B, and AC 43.9-1 (or subsequent revision thereof) for instructions and disposition of this form. This report is required by law (49 U.S.C.1421). Failure to report can result in a civil penalty not to exceed $1,000 for each such violation (Section 901 Federal Aviation Act of 1958).

1. Aircraft	Make **RAYTHEON AIRCRAFT COMPANY**	Model **B200**
	Serial No. **BB-1668**	Nationality and Registration Mark **N6WU**
2. Owner	Name *(As shown on registration certificate)* **LJ ASSOCIATES INC**	Address *(As shown on registration certificate)* **200 PLEASANT UNITY RD STE 112** **LATROBE PA 15650-4609**

3. For FAA Use Only

4. Unit Identification				**5. Type**	
Unit	Make	Model	Serial No.	Repair	Alteration
AIRFRAME	----------*(As described in Item 1 above)*----------				**X**
POWERPLANT					
PROPELLER					
APPLIANCE	Type Manufacturer				

6. Conformity Statement

A. Agency's Name and Address	B. Kind of Agency		C. Certificate No.
Pro Star Aviation, LLC. **Manchester Airport** **5 Industrial Drive** **Londonderry, NH 03053**		U.S. Certificated Mechanic	**CRS# P6UR006Y** RADIO CLASS (1, 2, & 3) AIRFRAME CLASS 3 LIMITED AIRFRAME LIMITED POWERPLANT LIMITED INSTRUMENT LIMITED ACCESSORY
		Foreign Certificated Mechanic	
	X	Certificated Repair Station	
		Manufacturer	

D. I certify that the repair and/or alteration made to the unit(s) identified in item 4 above and described on the reverse or attachments hereto have been made in accordance with the requirements of Part 43 of the U.S. Federal Aviation Regulations and that the information furnished herein is true and correct to the best of my knowledge.

Date	Signature of Authorized Individual
10/18/02	Jeffrey Shaw

7. Approval for Return to Service

Pursuant to the authority given persons specified below, the unit identified in item 4 was inspected in the manner prescribed by the Administrator of the Federal Aviation Administration and is ☒ APPROVED ☐ REJECTED

BY							Other *(Specify)*
		FAA Flt. Standards Inspector		Manufacturer		Inspection Authorization	
		FAA Designee	X	Repair Station		Person Approved by Transport Canada Airworthiness Group	

Date of Approval or Rejection	Certificate or Designation No.	Signature of Authorized Individual
10/18/02	**P6UR006Y**	**JEFFREY SHAW** Jeffrey Shaw

NOTICE

Weight and balance or operating limitation changes shall be entered in the appropriate aircraft record. An alteration must be compatible with all previous alterations to assure continued conformity with the applicable airworthiness requirements.

8. Description of Work Accomplished

(If more space is required, attach additional sheets. Identify with aircraft nationality and registration mark and date work completed.)

REGISTRATION – N6WU	MAKE – RAYTHEON AIRCRAFT COMPANY	MODEL – B200	S/N – BB-1668

Enabled the Mark VI EGPWS installation in accordance with Pro Star Aviation's STC number SA00157BO.

The operator was furnished with Instructions for Continued Airworthiness document number 0102-ICA-01 and FAA Approved flight manual supplement document number 0102-FMS-01 dated 10/09/02.

Pertinent details of work performed are retained in Pro Star Aviation, LLC. work order number 20328.

---------- END ----------

OCT 2002
Portland, ME
Flight Standards
Dist Office
65

☒ Additional Sheets Are Attached

* U.S. GOVERNMENT PRINTING OFFICE: 1992-769-012/60157

Form Approved
O.M.B. No. 2120-0018

U.S. Department of Transportation
Federal Aviation Administration

APPLICATION FOR AIRWORTHINESS CERTIFICATE

INSTRUCTIONS - Print or type. Do not write in shaded areas; these are for FAA use only. Submit original only to an authorized FAA Representative. If additional space is required, use an attachment. For special flight permits complete Sections II and VI or VII as applicable

I. AIRCRAFT DESCRIPTION

1. REGISTRATION MARK: N6WU	2. AIRCRAFT BUILDER'S NAME (Make): RAYTHEON AIRCRAFT COMPANY	3. AIRCRAFT MODEL DESIGNATION: B200	4. YR. MFR: 1999
5. AIRCRAFT SERIAL NO.: BB-1668	6. ENGINE BUILDER'S NAME (Make): Pratt & Whitney	7. ENGINE MODEL DESIGNATION: PT6A-42	FAA CODING: 715006 52032
8. NUMBER OF ENGINES: 1	9. PROPELLER BUILDER'S NAME (Make): Hartzell	10. PROPELLER MODEL DESIGNATION: HC-E4N-3G	11. AIRCRAFT IS (Check if applicable): IMPORT

2

II. CERTIFICATION REQUESTED

APPLICATION IS HEREBY MADE FOR : (Check applicable items)

A	1	X	STANDARD AIRWORTHINESS CERTIFICATE (Indicate category)	X	NORMAL		UTILITY		ACROBATIC		TRANSPORT		GLIDER	BALLOON
B			SPECIAL AIRWORTHINESS CERTIFICATE (Check appropriate items)											
	2		LIMITED											
	5		PROVISIONAL (Indicate class)	1		CLASS I								
				2		CLASS II								
	3		RESTRICTED (Indicate operation(s) to be conducted)	1		AGRICULTURE AND PEST CONTROL	2		AERIAL SURVEYING	3		AERIAL ADVERTISING		
				4		FOREST (Wildlife conservation)	5		PATROLLING	6		WEATHER CONTROL		
				7		CARRIAGE OF CARGO	0		OTHER (Specify)					
	4		EXPERIMENTAL (Indicate operation(s) to be conducted)	1		RESEARCH AND DEVELOPMENT	2		AMATEUR BUILT	3		EXHIBITION		
				4		RACING	5		CREW TRAINING			MKT. SURVEY		
				0		TO SHOW COMPLIANCE WITH FAR								
	8		SPECIAL FLIGHT PERMIT (Indicate operation to be conducted. then complete Section VI or VII as applicable on reverse side)	1		FERRY FLIGHT FOR REPAIRS, ALTERATIONS, MAINTENANCE OR STORAGE								
				2		EVACUATE FROM AREA OF IMPENDING DANGER								
				3		OPEATION IN EXCESS OF MAXIMUM CERTIFICATED TAKE-OFF WEIGHT								
				4		DELIVERING OR EXPORT	5		PRODUCTION FLIGHT TESTING					
				6		CUSTOMER DEMONSTRATION FLIGHTS								
C	6		MULTIPLE AIRWORTHINESS CERTIFICATE (Check ABOVE "Restricted Operation" and "Standard" or "Limited." as applicable.)											

III. OWNER'S CERTIFICATION

A. REGISTERED OWNER (As shown on certificate of aircraft registration) — IF DEALER, CHECK HERE → X

NAME	ADDRESS
RAYTHEON AIRCRAFT COMPANY	P.O. Box 85 Wichita, Ks. 67201

B. AIRCRAFT CERTIFICATION BASIS (Check applicable blocks and complete items as indicated)

X	AIRCRAFT SPECIFICATION OR TYPE CERTIFICATE DATA SHEET (Give No. and Revision No.) A24CE, Rev. 72	X	AIRWORTHINESS DIRECTIVES (Check if all applicable AD's complied with and give latest AD No.) ISSUE 99-25
	AIRCRAFT LISTING (Give page number(s)) N/A		SUPPLEMENTAL TYPE CERTIFICATE (List number of each STC incorporated) N/A

C. AIRCRAFT OPERATION AND MAINTENANCE RECORDS

X	CHECK IF RECORDS IN COMPLIANCE WITH FAR 91.~~173~~. 417	TOTAL AIRFRAME HOURS 14.2	3 EXPERIMENTAL ONLY (Enter hours flown since last certificate issued or renewed) N/A

D. **CERTIFICATION** — I hereby certify that I am the registered owner (or his agent) of the aircraft described above; that the aircraft is registered with the Federal Aviation Administration in accordance with Section 501 of the Federal Aviation Act of 1958, and applicable Federal Aviation Regulations; and that the aircraft has been inspected and is airworthy and eligible for the airworthiness certificate requested.

DATE OF APPLICATION	NAME AND TITLE (Print or type)	SIGNATURE
07-30-99 A12-18-99	R.M. Workman – Manager QA	R. M. Workman

IV. INSPECTION AGENCY VERIFICATION

A. THE AIRCRAFT DESCRIBED ABOVE HAS BEEN INSPECTED AND FOUND AIRWORTHY BY : (Complete this Section only if FAR 21.183(d) applies)

2		FAR PART 121 OR 127 CERTIFICATE HOLDER (Give Certificate No.)	3		CERTIFICATED MECHANIC (Give Certificate No.)	6		CERTIFICATED REPAIR STATION (Give Certificate No.)
5		AIRCRAFT MANUFACTURER (Give name of firm)						

DATE	TITLE	SIGNATURE

V. FAA REPRESENTATIVE CERTIFICATION

(Check ALL applicable blocks in items A and B)

A. I find that the aircraft described in Section I or VII meets requirements for :

	X	THE CERTIFICATE REQUESTED	
4		AMENDMENT OR MODIFICATION OF CURRENT AIRWORTHINESS CERTIFICATE	

B. Inspection for a special permit under Section VII was conducted by:

	FAA INSPECTOR		FAA DESIGNEE		
	CERTIFICATE HOLDER UNDER:		FAR 65	FAR 121, 127 OR 135	FAR 145

DATE	DISTRICT OFFICE		DESIGNEE'S SIGNATURE AND NO.		FAA INSPECTOR'S SIGNATURE
07-30-99 A12-18-99	CE-43	4	Robert Alliband, DOA, PC#8	1	

FAA Form 8130-6 (11-88) SUPERSEDES PREVIOUS EDITION

*U.S. GPO:1989-241-672/90913

VI. PRODUCTION FLIGHT TESTING

A. MANUFACTURER

NAME	ADDRESS

B. PRODUCTION BASIS *(Check applicable item)*

- [ ] PRODUCTION CERTIFICATE *(Give production certificate number)*
- [ ] TYPE CERTIFICATE ONLY
- [ ] APPROVED PRODUCTION INSPECTION SYSTEM

C. GIVE QUANTITY OF CERTIFICATES REQUIRED FOR OPERATING NEEDS →

DATE OF APPLICATION	NAME AND TITLE *(Print or type)*	SIGNATURE

VII. SPECIAL FLIGHT PERMIT PURPOSES OTHER THAN PRODUCTION FLIGHT TEST

A. DESCRIPTION OF AIRCRAFT

REGISTERED OWNER	**ADDRESS**
BUILDER *(Make)*	**MODEL**
SERIAL NUMBER	**REGISTRATION MARK**

B. DESCRIPTION OF FLIGHT — CUSTOMER DEMONSTRATION FLIGHTS ☐ *(Check if applicable)*

FROM	**TO**	
VIA	**DEPARTURE DATE**	**DURATION**

C. CREW REQUIRED TO OPERATE THE AIRCRAFT AND ITS EQUIPMENT

- [ ] PILOT
- [ ] CO-PILOT
- [ ] NAVIGATOR
- [ ] OTHER *(Specify)*

D. THE AIRCRAFT DOES NOT MEET THE APPLICABLE AIRWORTHINESS REQUIREMENTS AS FOLLOWS:

E. THE FOLLOWING RESTRICTIONS ARE CONSIDERED NECESSARY FOR SAFE OPERATION *(Use attachment if necessary)*

F. CERTIFICATION — I hereby certify that I am the registered owner (or his agent) of the aircraft described above; that the aircraft is registered with the Federal Aviation Administration in accordance with Section 501 of the Federal Aviation Act of 1958, and applicable Federal Aviation Regulations; and that the aircraft has been inspected and is airworthy for the flight described.

DATE	NAME AND TITLE *(Print or type)*	SIGNATURE

VIII. AIRWORTHINESS DOCUMENTATION (FAA use only)

X	**A.** Operating Limitations and Markings in Compliance with FAR 91.9 91.~~31~~-9 as Applicable		**G.** Statement of conformity, FAA Form 8130-9 *(Attach when required)*
	B. Current Operating Limitations Attached		**H.** Foreign Airworthiness Certification for Import Aircraft *(Attach when required)*
	C. Data, Drawing, Photographs, etc. *(Attached when required)*		**I.** Previous Airworthiness Certificate Issued in Accordance with
X	**D.** Current Weight and Balance Information Available in Aircraft	X	**FAR 21.183 (a) per 21.273**_____ **CAR** _____ *(Original Attached)*
	E. Major Repair and Alteration, FAA Form 337 *(Attached when required)*	X	**J.** Current Airworthiness Certificate Issued in Accordance with
X	**F.** This inspection Recorded in Aircraft Records		**FAR** __**21.183 (a) per 21.273**__ (Copy *attached*)

UNITED STATES OF AMERICA

DEPARTMENT OF TRANSPORTATION—FEDERAL AVIATION ADMINISTRATION

STANDARD AIRWORTHINESS CERTIFICATE

1. NATIONALITY AND REGISTRATION MARKS	2. MANUFACTURER AND MODEL	3. AIRCRAFT SERIAL NUMBER	4. CATEGORY
N6WU	RAYTHEON AIRCRAFT COMPANY B200	BB-1668	NORMAL

5. AUTHORITY AND BASIS FOR ISSUANCE

This airworthiness certificate is issued pursuant to the Federal Aviation Act of 1958 and certifies that, as of the date of issuance, the aircraft to which issued has been inspected and found to conform to the type certificate therefor, to be in condition for safe operation, and has been shown to meet the requirements of the applicable comprehensive and detailed airworthiness code as provided by Annex 8 to the Convention on International Civil Aviation, except as noted herein.

Exceptions:

NONE

6. TERMS AND CONDITIONS

Unless sooner surrendered, suspended, revoked, or a termination date is otherwise established by the Administrator, this airworthiness certificate is effective as long as the maintenance, preventative maintenance, and alterations are performed in accordance with Parts 21, 43, and 91 of the Federal Aviation Regulations, as appropriate, and the aircraft is registered in the United States.

DATE OF ISSUANCE	FAA REPRESENTATIVE	DESIGNATION NUMBER
07-30-99 ~~A12-18-99~~	Robert Alliband	DOA, PC#8

Any alteration, reproduction, or misuse of this certificate may be punishable by a fine not exceeding $1,000, or imprisonment not exceeding 3 years, or both. THIS CERTIFICATE MUST BE DISPLAYED IN THE AIRCRAFT IN ACCORDANCE WITH APPLICABLE FEDERAL AVIATION REGULATIONS.

☆ U.S. GOVERNMENT PRINTING OFFICE: 1991 - 668-228

UNITED STATES OF AMERICA

DEPARTMENT OF TRANSPORTATION—FEDERAL AVIATION ADMINISTRATION

STANDARD AIRWORTHINESS CERTIFICATE

1. NATIONALITY AND REGISTRATION MARKS	2. MANUFACTURER AND MODEL	3. AIRCRAFT SERIAL NUMBER	4. CATEGORY
N3168F	RAYTHEON AIRCRAFT COMPANY B200	BB-1668	NORMAL

5. AUTHORITY AND BASIS FOR ISSUANCE

This airworthiness certificate is issued pursuant to the Federal Aviation Act of 1958 and certifies that, as of the date of issuance, the aircraft to which issued has been inspected and found to conform to the type certificate therefor, to be in condition for safe operation, and has been shown to meet the requirements of the applicable comprehensive and detailed airworthiness code as provided by Annex 8 to the Convention on International Civil Aviation, except as noted herein.

Exceptions: NONE

CANCELLED

12-18-99

6. TERMS AND CONDITIONS

Unless sooner surrendered, suspended, revoked, or a termination date is otherwise established by the Administrator, this airworthiness certificate is effective as long as the maintenance, preventative maintenance, and alterations are performed in accordance with Parts 21, 43 and 91 of the Federal Aviation Regulations, as appropriate, and the aircraft is registered in the United States.

DATE OF ISSUANCE	FAA REPRESENTATIVE	DESIGNATION NUMBER
07-30-99	Robert Alliband	DOA, PC#8

Any alteration, reproduction, or misuse of this certificate may be punishable by a fine not exceeding $1,000, or imprisonment not exceeding 3 years, or both. THIS CERTIFICATE MUST BE DISPLAYED IN THE AIRCRAFT IN ACCORDANCE WITH APPLICABLE FEDERAL AVIATION REGULATIONS.

U.S. Department of Transportation
Federal Aviation Administration

MAJOR REPAIR AND ALTERATION
(Airframe, Powerplant, Propeller, or Appliance)

Form Approved
OMB No. 2120-0020

For FAA Use Only

Office Identification
SW FSDO 17

INSTRUCTIONS: Print or type all entries. See FAR 43.9, FAR 43 Appendix B, and AC 43.9-1 (or subsequent revision thereof) for instructions and disposition of this form. This report is required by law (49 U.S.C. 1421). Failure to report can result in a civil penalty not to exceed $1,000 for each such violation (Section 901 Federal Aviation Act of 1958).

1. Aircraft	Make: RAYTHEON	Model: B200
	Serial No.: BB-1668	Nationality and Registration Mark: USA N3168F
2. Owner	Name (As shown on registration certificate): RAYTHEON AIRCRAFT COMPANY	Address (As shown on registration certificate): 9709 E CENTRAL AVE WICHITA, KANSAS 67206-2507

3. For FAA Use Only

THE DATA IDENTIFIED HEREIN COMPLIED WITH APPLICABLE AIRWORTHINESS REQUIREMENTS AND IS APPROVED ONLY FOR THE ABOVE DESCRIBED AIRCRAFT SUBJECT TO CONFORMITY INSPECTION BY A PERSON AUTHORIZED IN FAR 43.7.

DATE: DEC 28 1999 FAA INSPECTOR: Billy R. Rutley SAT- FSDO

4. Unit Identification / **5. Type**

Unit	Make	Model	Serial No.	Repair	Alteration
AIRFRAME	********** (As described in Item 1 above) **********				X
POWERPLANT					
PROPELLER					
APPLIANCE	Type / Manufacturer				

6. Conformity Statement

A. Agency's Name and Address	B. Kind of Agency	C. Certificate No.
RAYTHEON AIRCRAFT SERVICES 1115 PAUL WILKINS ROAD SAN ANTONIO TEXAS 78216	[ ] U.S. Certificated Mechanic [ ] Foreign Certificated Mechanic [X] Certificated Repair Station [ ] Manufacturer	CRS-XA14605K LIMITED AIRFRAME RADIO CLASS I,II,III

D. I certify that the repair and/or alteration made to the unit(s) identified in item 4 above and described on the reverse or attachments hereto have been made in accordance with the requirements of Part 43 of the U.S. Federal Aviation Regulations and that the information furnished herein is true and correct to the best of my knowledge.

Date	Signature of Authorized Individual
12-20-99	MONTY CARROLL Monty Carroll

7. Approval for Return to Service

Pursuant to the authority given persons specified below, the unit identified in item 4 was inspected in the manner prescribed by the Administrator of the Federal Aviation Administration and is [X] APPROVED [ ] REJECTED

BY						
	FAA Flt. Standards Inspector		Manufacturer		Inspection Authorization	Other (Specify)
	FAA Designee	X	Repair Station		Person Approved by Transport Canada Airworthiness Group	

Date of Approval or Rejection	Certificate or Designation No.	Signature of Authorized Individual
01-07-08	CRS-XA14605K	Monty Carroll

FAA Form 337 (12-88)

NOTICE

Weight and balance or operating limitation changes shall be entered in the appropriate aircraft record. An alteration must be compatible with all previous alterations to assure continued conformity with the applicable airworthiness requirements.

8. Description of Work Accomplished

(If more space is required, attach additional sheets. Identify with aircraft nationality and registration mark and date work completed.)

MAKE: RAYTHEON B200 S/N: BB-1668 REG: N3168F DATE: 12-20-99

REFERENCE THE FORM 337 DATED 12-15-99, INSTALLATION OF THE UNIVERSAL AVIONICS UNS-1K FLIGHT MANAGEMENT SYSTEM APPROVED FOR VFR NAVIGATION ONLY.

THE UNIVERSAL AVIONICS UNS-1K FLIGHT MANAGEMENT SYSTEM HAS BEEN GROUND CHECKED AND FLIGHT CHECKED ON 12-15-99 AND FOUND TO MEET THE ACCURACY REQUIREMENTS FOUND IN AC 20-130A, AC 91-49 AND AC 120-33.

THE FAA APPROVED FLIGHT MANUAL SUPPLEMENT DATED DEC 28 1999 AND THE UNIVERSAL AVIONICS UNS-1K FLIGHT MANAGEMENT SYSTEM OPERATOR'S MANUAL, REPORT #2423sv603 DATED 01-30-98 MUST BE ABOARD THE AIRCRAFT DURING IFR FLIGHT PREDICATED ON THE USE OF THE FLIGHT MANAGEMENT SYSTEM.

THE UNIVERSAL AVIONICS UNS-1K FLIGHT MANAGEMENT SYSTEM IS NOW APPROVED FOR IFR ENROUTE, TERMINAL AND APPROACH NAVIGATION.

THE PREVIOUSLY INSTALLED PLACARD WHICH READ "GPS VFR ONLY" HAS BEEN REMOVED FROM THE INSTRUMENT PANEL.

----------END----------

☐ Additional Sheets Are Attached

U.S. Department of Transportation
Federal Aviation Administration

MAJOR REPAIR AND ALTERATION
(Airframe, Powerplant, Propeller, or Appliance)

Form Approved
OMB No. 2120-0020

For FAA Use Only

Office Identification SWFSDO17 BRR

INSTRUCTIONS: Print or type all entries. See FAR 43.9, FAR 43 Appendix B, and AC 43.9-1 (or subsequent revision thereof) for instructions and disposition of this form. This report is required by law (49 U.S.C. 1421). Failure to report can result in a civil penalty not to exceed $1,000 for each such violation (Section 901 Federal Aviation Act of 1958).

1. Aircraft	Make: RAYTHEON	Model: B200
	Serial No.: BB-1668	Nationality and Registration Mark: USA N3168F
2. Owner	Name (As shown on registration certificate): RAYTHEON AIRCRAFT COMPANY	Address (As shown on registration certificate): 9709 E CENTRAL AVE WICHITA, KANSAS 67206-2507

3. For FAA Use Only

4. Unit Identification / **5. Type**

Unit	Make	Model	Serial No.	Repair	Alteration
AIRFRAME	********** (As described in Item 1 above) **********				X
POWERPLANT					
PROPELLER					
APPLIANCE	Type				
	Manufacturer				

6. Conformity Statement

A. Agency's Name and Address	B. Kind of Agency	C. Certificate No.
RAYTHEON AIRCRAFT SERVICES 1115 PAUL WILKINS ROAD SAN ANTONIO TEXAS 78216	[ ] U.S. Certificated Mechanic [ ] Foreign Certificated Mechanic [X] Certificated Repair Station [ ] Manufacturer	CRS-XA14605K LIMITED AIRFRAME RADIO CLASS I,II,III

D. I certify that the repair and/or alteration made to the unit(s) identified in item 4 above and described on the reverse or attachments hereto have been made in accordance with the requirements of Part 43 of the U.S. Federal Aviation Regulations and that the information furnished herein is true and correct to the best of my knowledge.

Date	Signature of Authorized Individual
12-15-99	MONTY CARROLL Monty Carroll

7. Approval for Return to Service

Pursuant to the authority given persons specified below, the unit identified in item 4 was inspected in the manner prescribed by the Administrator of the Federal Aviation Administration and is [X] APPROVED [ ] REJECTED

BY						
	FAA Flt. Standards Inspector		Manufacturer		Inspection Authorization	Other (Specify)
	FAA Designee	X	Repair Station		Person Approved by Transport Canada Airworthiness Group	

Date of Approval or Rejection	Certificate or Designation No.	Signature of Authorized Individual
12-15-99	CRS-XA14605K	MONTY CARROLL Monty Carroll

FAA Form 337 (12-88)

NOTICE

Weight and balance or operating limitation changes shall be entered in the appropriate aircraft record. An alteration must be compatible with all previous alterations to assure continued conformity with the applicable airworthiness requirements.

8. Description of Work Accomplished

(If more space is required, attach additional sheets. Identify with aircraft nationality and registration mark and date work completed.)

MAKE: RAYTHEON B200 S/N: BB-1668 REG: N3168F DATE: 12-15-99

INSTALLED A UNIVERSAL AVIONICS UNS-1K FLIGHT MANAGEMENT SYSTEM CONSISTING OF THE FOLLOWING EQUIPMENT:

MFG/MOD	DESCRIPTION	P/N	WEIGHT	ARM
UNIVERSAL	FLT MANAGEMENT SYS NCU	1116-40-1116	6.5	68.0
UNIVERSAL	MOUNT KIT	K12036	1.5	68.0
UNIVERSAL	CONTROL DISPLAY UNIT	1117-12	2.6	128.0
UNIVERSAL	DATA TRANSFER UNIT	1405-01-2	3.5	141.3
UNIVERSAL	CONFIG. MODULE	11921	0.1	68.0
UNIVERSAL	GPS ANTENNA	10706	0.5	137.3
ROSEMONT	OAT SENSOR	122-384003-1	0.5	90.5

THE UNIVERSAL AVIONICS UNS-1K FMS DTU UNIT WAS INSTALLED IN ACCORDANCE WITH THE RAYTHEON AIRCRAFT SERVICES DWG. #417-2300-002 REV. A DATED 11-15-99. THE UNS-1K FMS CDU UNIT, OAT SENSOR AND THE ANNUNCIATOR WERE INSTALLED IN ACCORDANCE WITH THE RAYTHEON AIRCRAFT SERVICES DWG. #421-3160-001 REV. IR DATED 11-04-99. REFERENCE THE FORM 8110-3 DATED 12-13-99 FOR BOTH DRAWINGS LISTED ABOVE APPROVED BY KAMALA J. MEADER, DESIGNATED ENGINEERING REPRESENTATIVE, #DERT-405126-CE, STRUCTURAL. THE UNS-1K NCU UNIT WAS INSTALLED IN ACCORDANCE WITH THE REPORT #121399-1S REV. IR DATED 12-13-99 AND THE RAYTHEON AIRCRAFT SERVICES DWG. #RAS991209 REV. IR DATED 12-09-99, REFERENCE THE FORM 8110-3 DATED 12-13-99 APPROVED BY VICTOR JUAREZ, DESIGNATED ENGINEERING REPRESENTATIVE, #DERT-710148-SW, STRUCTURES. THE GPS ANTENNA WAS INSTALLED IN ACCORDANCE WITH THE REPORT #101599A REV. IR DATED 10-15-99 (SECTION 3), REFERENCE THE FORM 8110-3 DATED 12-13-99 APPROVED BY VICTOR JAUREZ, DESIGNATED ENGINEERING REPRESENTATIVE, #DERT-710148-SW, STRUCTURES. THE ELECTRICAL WIRING WAS INSTALLED IN ACCORDANCE WITH THE RAYTHEON AIRCRAFT SERVICES DWG. #RAS-32-9913 REV. IR DATED 11-15-99, REFERENCE THE FORM 8110-3 DATED 12-12-99 APPROVED BY ROBERT M. HURLEY, DESIGNATED ENGINEERING REPRESENTATIVE, #DERT-710137-SW, SYSTEMS AND EQUIPMENT.

A FUNCTIONAL TEST OF THE EQUIPMENT HAS BEEN PERFORMED IN ACCORDANCE WITH FAR 23.1301, FAR 23.1309 AND CHECKED IN ACCORDANCE WITH FAR 23.1431 FOR OPERATING SATISFACTORILY AND DID NOT ADVERSELY AFFECT OTHER COMPONENTS INSTALLED IN THE AIRCRAFT.

THE UNS-1K OPERATOR'S MANUAL, REPORT #2423sv603 DATED 01-30-98, THE UNS-1K OPERATOR'S CHECKLIST, REPORT #2411sv603/703 DATED 04-06-98 AND THE INSTRUCTIONS FOR CONTINUED AIRWORTHINESS DOC. #UNS-1K-ICA-BB-1668 DATED 12-13-99 HAVE BEEN PUT IN THE AIRCRAFT AS PART OF THE AIRCRAFT'S PERMANENT RECORDS. THE INSTRUMENT PANEL IS PLACARDED "GPS VFR ONLY."

THE AIRCRAFT WEIGHT AND BALANCE FORM AND EQUIPMENT LIST HAVE BEEN REVISED TO REFLECT THIS MODIFICATION AND BOTH FORMS HAVE BEEN INSERTED IN THE AIRCRAFT FLIGHT MANUAL.

----------END----------

[X] Additional Sheets Are Attached

★ U.S. GOVERNMENT PRINTING OFFICE: 1992-769-012/60157

99.333.1

U.S. DEPARTMENT OF TRANSPORTATION
FEDERAL AVIATION ADMINISTRATION

STATEMENT OF COMPLIANCE WITH THE FEDERAL AVIATION REGULATIONS

DATE: December 13, 1999

AIRCRAFT OR AIRCRAFT COMPONENT IDENTIFICATION

MAKE	MODEL NO.	TYPE (Airplane, Radio, Helicopter, etc.)	NAME OF APPLICANT
Beech Aircraft Corporation	Super King Air Model B200	Airplane	Raytheon Aircraft Services – San Antonio, Texas

LIST OF DATA

IDENTIFICATION	TITLE
DRAWINGS	
421-3160-001	"UNS-1K Equipment Instl. King Air B300", Revision IR, dated 11/4/99 by Raytheon Aircraft Services, San Antonio, Texas.
417-2300-002	"Equipment Instl King Air B200", Revision A, dated 11/15/99 by Raytheon Aircraft Services, San Antonio, Texas.
	NOTE: The above data is approved for structural design aspects only. Conformity inspection is still required.

PURPOSE OF DATA

In support of major alteration for aircraft serial number BB-1668 (Registration Number N3168F) only.

APPLICABLE REQUIREMENTS (List specific sections)

FAR's 23.301, 23.303, 23.305, 23.307(a), 23.321(a), 23.561(b3), 23.601, 23.603, 23.605(a), 23.607, 23.613, 23.615, 23.625(a)(b)(c).

CERTIFICATION — Under authority vested by direction of the Administrator and in accordance with conditions and limitations of appointment under Part 183 of the Federal Aviation Regulations, data listed above and on attached sheets numbered NA have been examined in accordance with established procedures and found to comply with applicable requirements of the Federal Aviation Regulations.

I (We) Therefore [ ] Recommend approval of these data

[X] Approve these data

SIGNATURE(S) OF DESIGNATED ENGINEERING	DESIGNATION	CLASSIFICATION(S)
Kamala J. Meader Kamala Jane Meader	DERT-405126-CE	Structural

COMPUTER GENERATED FAA Form 8110-3

99-0368-S

U.S. DEPARTMENT OF TRANSPORTATION
FEDERAL AVIATION ADMINISTRATION

STATEMENT OF COMPLIANCE WITH THE FEDERAL AVIATION REGULATIONS

DATE: 12/13/99

AIRCRAFT OR AIRCRAFT COMPONENT IDENTIFICATION

MAKE	MODEL NO.	TYPE (Airplane, Radio, Helicopter, etc.)	NAME OF APPLICANT
BEECHCRAFT	B200	Airplane	RAYTHEON AIRCRAFT SERVICES

LIST OF DATA

IDENTIFICATION	TITLE
Report Number: 121399-1S Rev. IR Date: 12/13/99	Structural Substantiation of TCAS Antenna Installation in BEECHCRAFT Model B200, AC Reg. No. N3168F, S/N BB-1668 NOTES: (1) The electrical portions of the installation will require separate approval. (2) Raytheon Drawing No. RAS991209 defines the modified installation. (3) Raytheon Drawing No. RAS991209 is included in Pages 5 through 12 of the listed report.

PURPOSE OF DATA

APPROVE STRUCTURES DATA ONLY IN SUPPORT OF MAJOR ALTERATION S/N BB-1668.

APPLICABLE REQUIREMENTS *(List specific sections)*

FAR's 23.301 THROUGH 23.341, 23.471, 23.561, 23.601 THROUGH 23.615, 23.571

CERTIFICATION - Under authority vested by direction of the Administrator and in accordance with conditions and limitations of appointment under Part 183 of the Federal Aviation Regulations, data listed above and on attached sheets numbered NONE have been examined in accordance with established procedures and found to comply with applicable requirements of the Federal Aviation Regulations.

I (We) therefore ☐ Recommend approval of these data

☒ Approve these data

SIGNATURE(S) OF DESIGNATED ENGINEERING REPRESENTATIVE(S)	DESIGNATION NUMBER(S)	CLASSIFICATION(S)
Victor Juarez	DERT-710148-SW	Structures

FAA Form 8110-3 (11-70) SUPERSEDES PREVIOUS EDITION (Computer Generated)

99-0369-S

U.S. DEPARTMENT OF TRANSPORTATION FEDERAL AVIATION ADMINISTRATION **STATEMENT OF COMPLIANCE WITH THE FEDERAL AVIATION REGULATIONS**			DATE 12/13/99
AIRCRAFT OR AIRCRAFT COMPONENT IDENTIFICATION			
MAKE BEECHCRAFT	MODEL NO. B200	TYPE (Airplane, Radio, Helicopter, etc.) Airplane	NAME OF APPLICANT RAYTHEON AIRCRAFT SERVICES

LIST OF DATA

IDENTIFICATION	TITLE
Report Number: 101599A Rev. IR Date: 10/15/99	Structural Substantiation of GPS Installation in BEECHCRAFT Model B200 NOTES: (1) The electrical portions of the installation will require separate approval. (2) The NCU installation per Page 2-5 of the approved report does not apply to the S/N BB-1668 GPS installation. (3) Raytheon Drawing No. RAS991006 which defines the GPS installation is given in Section 3 of the approved report.

PURPOSE OF DATA

APPROVE STRUCTURES DATA ONLY IN SUPPORT OF MAJOR ALTERATION S/N BB-1668.

APPLICABLE REQUIREMENTS *(List specific sections)*

FAR's 23.301 THROUGH 23.341, 23.471, 23.561, 23.601 THROUGH 23.615, 23.571

CERTIFICATION - Under authority vested by direction of the Administrator and in accordance with conditions and limitations of appointment under Part 183 of the Federal Aviation Regulations, data listed above and on attached sheets numbered NONE have been examined in accordance with established procedures and found to comply with applicable requirements of the Federal Aviation Regulations.

I (We) therefore ☐ Recommend approval of these data

☒ Approve these data

SIGNATURE(S) OF DESIGNATED ENGINEERING REPRESENTATIVE(S)	DESIGNATION NUMBER(S)	CLASSIFICATION(S)
Victor Juarez	DERT-710148-SW	Structures

FAA Form 8110-3 (11-70) SUPERSEDES PREVIOUS EDITION (Computer Generated)

069

U.S. DEPARTMENT OF TRANSPORTATION
FEDERAL AVIATION ADMINISTRATION

STATEMENT OF COMPLIANCE WITH THE FEDERAL AVIATION REGULATIONS

DATE: 12/12/99

AIRCRAFT OR AIRCRAFT COMPONENT IDENTIFICATION

MAKE	MODEL NO.	TYPE (Airplane, Radio, Helicopter, etc.)	NAME OF APPLICANT
Beechcraft	200	Airplane	Raytheon Aircraft Services

LIST OF DATA

IDENTIFICATION	TITLE
RAS-49-9915 Rev IR Dated 12/04/99	TCAS CAS-66A STC Deviations
RAS-32-9913 Rev IR Dated 11/15/99	UNS-1K GPS System with EFIS-84

Note: This approval is for the Electrical aspects of the engineering design data only, and is not installation approval.
Approval for aircraft S/N BB-1668 only.
Approval of TCAS minor deviations only to FAA STC SA115CH.
After modification is complete, perform EMI/RFI test in accordance with Raytheon report RAS-GF-9714, EMI/RFI Test Procedure.

PURPOSE OF DATA

In support of a modification to install A TCAS and GPS in serial number BB-1668.

APPLICABLE REQUIREMENTS (List specific sections)

FAR 23.1301 a,b,c
FAR 23.1307 b3
FAR 23.1329 h
FAR 23.1359 c
FAR 23.1431 b

CERTIFICATION - Under authority vested by direction of the Administrator and in accordance with conditions and limitations of appointment under Part 183 of the Federal Aviation Regulations, data listed above and on attached sheets numbered NONE have been examined in accordance with established procedures and found to comply with applicable requirements of the Federal Aviation Regulations.

I (We) Therefore
☐ Recommend approval of these data
☒ Approve these data

SIGNATURE(S) OF DESIGNATED ENGINEERING REPRESENTATIVE(S)	DESIGNATION NUMBER(S)	CLASSIFICATION(S)
Robert M. Hurley	DERT-710137-SW	Systems & Equipment

FAA Form 8110-3 (11-70) SUPERSEDES PREVIOUS EDITION GPO 901-813

INSTRUCTIONS FOR CONTINUED AIRWORTHINESS

FOR A RAYTHEON AIRCRAFT MODEL B200

WITH A UNIVERSAL AVIONICS UNS-1K FLIGHT MANAGEMENT SYSTEM

1. INTRODUCTION: THIS MAJOR ALTERATION TO THIS AIRCRAFT OBLIGATES THE AIRCRAFT OPERATOR TO INCLUDE THE FOLLOWING MAINTENANCE INFORMATION PROVIDED BY THIS DOCUMENT IN THE OWNER/OPERATOR'S AIRCRAFT MAINTENANCE MANUAL AND THE OWNER/OPERATOR'S AIRCRAFT SCHEDULED MAINTENANCE PROGRAM.

2. DESCRIPTION: THE UNIVERSAL AVIONICS UNS-1K FLIGHT MANAGEMENT SYSTEM CONSISTS OF A UNS-1K FLIGHT MANAGEMENT SYSTEM NCU, ONE CONTROL DISPLAY UNIT, ONE DATA TRANSFER UNIT, ONE CONFIGURATION MODULE, ONE GLOBAL POSITIONING SENSOR ANTENNA, ONE OAT SENSOR, ASSOCIATED WIRING, AND ANY RELATED HARDWARE. THE UNS-1K FLIGHT MANAGEMENT SYSTEM (NMS) IS A FULLY INTEGRATED NAVIGATION AND FLIGHT MANAGEMENT SYSTEM DESIGNED TO PROVIDE THE PILOT WITH CENTRALIZED CONTROL FOR THE AIRCRAFT NAVIGATION SENSORS, COMPUTER - BASED FLIGHT PLANNING, AND FUEL MANAGEMENT.

3. CONTROL, OPERATION INFORMATION: REFERENCE THE UNIVERSAL AVIONICS UNS-1K FLIGHT MANAGEMENT SYSTEM TECHNICAL MANUAL, REPORT #34-60-12, REV. 2 DATED 11-01-98, THE UNS-1K OPERATOR'S MANUAL, REPORT #2423sv603 DATED 01-30-98 AND THE UNS-1K OPERATOR'S CHECKLIST, REPORT #2411sv603/703 DATED 04-06-98 OR LATER REVISION.

4. SERVICING INFORMATION: THE UNIVERSAL AVIONICS UNS-1K FLIGHT MANAGEMENT SYSTEM IS ON CONDITION AND THERE IS NO PERIODIC, PREVENTIVE, OR SCHEDULED MAINTENANCE REQUIRED FOR CONTINUED OPERATION OF THIS SYSTEM.

5. MAINTENANCE INSTRUCTIONS: THE SCHEDULED MAINTENANCE TASKS REQUIRED BY THIS MODIFICATION TO BE ADDED TO THE AIRCRAFT OWNER/OPERATORS APPROPRIATE AIRPLANE MAINTENANCE PROGRAM AS FOLLOWS:

   a. PERFORM, ON AT LEAST AN ANNUAL BASES, A PERIODIC INSPECTION OF THE EQUIPMENT RACK, EQUIPMENT MOUNTINGS, ASSOCIATED WIRING, CABLES, CONNECTORS, HARDWARE, ANTENNA AND RELATED AIRCRAFT STRUCTURE FOR INTEGRITY, SECURITY, WEAR, CHAFFING, AND ETC.. SPECIAL ATTENTION SHOULD BE GIVEN TO THE AIRCRAFT PRIMARY STRUCTURE WITH REGARDS TO FATIGUE AND STRESS CRACKING, CORROSION, AND ETC..

6. TROUBLESHOOTING INFORMATION: REFERENCE THE UNIVERSAL AVIONICS UNS-1K FLIGHT MANAGEMENT SYSTEM TECHNICAL MANUAL, REPORT #34-60-12, REV. 2 DATED 11-01-98, THE UNS-1K OPERATOR'S MANUAL, REPORT #2423sv603 DATED 01-30-98 AND THE UNS-1K OPERATOR'S CHECKLIST, REPORT #2411sv603/703 DATED 04-06-98 OR LATER REVISION.

7. REMOVAL AND REPLACEMENT INFORMATION: REFERENCE THE UNIVERSAL AVIONICS UNS-1K FLIGHT MANAGEMENT SYSTEM TECHNICAL MANUAL, REPORT #34-60-12, REV. 2 DATED 11-01-98, THE UNS-1K OPERATOR'S MANUAL, REPORT #2423sv603 DATED 01-30-98 AND THE UNS-1K OPERATOR'S CHECKLIST, REPORT #2411sv603/703 DATED 04-06-98 OR LATER REVISION. SHOULD IT BECOME NECESSARY TO REMOVE THE UNIVERSAL AVIONICS UNS-1K FLIGHT MANAGEMENT SYSTEM , SECURE THE ASSOCIATED CABLES AND WIRING, COLLAR THE APPLICABLE CIRCUIT BREAKERS, PLACARD THE AIRCRAFT THAT THE UNIT HAS BEEN REMOVED, REVISE THE WEIGHT & BALANCE AND THE EQUIPMENT LIST AND MAKE A LOGBOOK ENTRY THE UNIT HAS BEEN REMOVED FOR SERVICE, REFER TO 91.213 OF TITLE 14 OF THE CODE OF FEDERAL REGULATIONS AND/OR THE AIRCRAFT's MEL.

8. DIAGRAMS: THERE ARE NO ACCESS PLATES THAT NEED TO BE REMOVED FOR INSPECTION.

9. SPECIAL INSPECTION REQUIREMENTS: SPECIAL INSPECTION REQUIREMENTS ARE NOT APPLICABLE.

10. APPLICATION OF PROTECTIVE TREATMENTS: APPLICATION OF PROTECTIVE TREATMENTS ARE NOT APPLICABLE.

11. DATA: INSTALLATION REQUIREMENTS MAY BE FOUND WITHIN THE ACCEPTED INDUSTRY PRACTICES CONTAINED WITHIN THE APPLICABLE SECTIONS OF ADVISORY CIRCULAR AC 43.13-1B AND THE APPLICABLE SECTIONS OF ADVISORY CIRCULAR AC 43.13-2A.

12. LIST OF SPECIAL TOOLS: SPECIAL TOOLS ARE NOT REQUIRED.

13. FOR COMMUTER CATEGORY AIRCRAFT: N/A, THIS AIRCRAFT IS NOT COMMUTER CATEGORY AIRCRAFT

    a. ELECTRICAL LOADS: THE RAYTHEON AIRCRAFT SERVICES ELECTRICAL LOAD ANALYSIS DOCUMENT _____ REV. ___ DATED _____ AND THE RAYTHEON AIRCRAFT SERVICES EMI/RFI GROUND TEST PROCEDURES DOCUMENT _____ REV. ___ DATED _____ HAVE BEEN PLACED IN THE AIRCRAFT AS PART OF THE AIRCRAFT's PERMANENT RECORDS.

    b. METHODS OF BALANCING FLIGHT CONTROLS: N/A TO THIS INSTALLATION

    c. IDENTIFICATION OF PRIMARY AND SECONDARY STRUCTURES: N/A TO THIS INSTALLATION

    d. SPECIAL REPAIR METHODS APPLICABLE TO THE AIRPLANE: N/A TO THIS INSTALLATION

14. RECOMMENDED OVERHAUL PERIODS: THERE ARE NO ADDITIONAL OVERHAUL TIME LIMITATIONS.

15. AIRWORTHINESS LIMITATION SECTION: THERE ARE NO ADDITIONAL AIRWORTHINESS LIMITATIONS.

16. REVISION: THE INSTRUCTIONS FOR CONTINUED AIRWORTHINESS CHECKLIST (ICA) MAY BE REVISED BY SUBMITTING A LETTER TO THE LOCAL FSDO WITH A COPY OF THE REVISED FAA FORM 337 AND REVISED ICA. THE FAA INSPECTOR ACCEPTS THE CHANGE BY SIGNING BLOCK 3 AND INCLUDING THE FOLLOWING STATEMENT: "THE ATTACHED REVISED/NEW INSTRUCTIONS FOR CONTINUED AIRWORTHINESS (DATE_____) FOR THE ABOVE AIRCRAFT OR COMPONENT MAJOR ALTERATION HAVE BEEN ACCEPTED BY THE FAA, SUPERSEDING THE INSTRUCTIONS FOR CONTINUED AIRWORTHINESS (DATE_____)." ONCE THE REVISION HAS BEEN ACCEPTED, A MAINTENANCE RECORD ENTRY WILL BE MADE, IDENTIFYING THE REVISION, ITS LOCATION AND DATE OF THE FORM 337.

17. ASSISTANCE: NOT APPLICABLE.

18. IMPLEMENTATION AND RECORD KEEPING:

    a. FOR MAJOR ALTERATIONS PERFORMED IN ACCORDANCE WITH FAA FIELD APPROVAL POLICY, THE OWNER/OPERATOR OPERATING UNDER PART 91 IS RESPONSIBLE FOR ENSURING THAT THE ICA IS MADE PART OF THE APPLICABLE SECTION 91.409 INSPECTION PROGRAM FOR THEIR AIRCRAFT. THIS IS ACCOMPLISHED WHEN A MAINTENANCE ENTRY IS MADE IN THE AIRCRAFT's MAINTENANCE RECORD IN ACCORDANCE WITH SECTION 43.9. THIS ENTRY RECORDS THE MAJOR ALTERATION AND IDENTIFIES THE ORIGINAL ICA LOCATION (e.g., BLOCK 8 OF FAA FORM 337) ALONG WITH AN INSPECTION/MAINTENANCE REQUIREMENTS.

    b. FOR MAJOR ALTERATIONS PERFORMED IN ACCORDANCE WITH A FIELD APPROVAL ON AIR CARRIER AIRCRAFT, THE AIR CARRIER OPERATOR IS RESPONSIBLE FOR ENSURING THAT THE ICA IS MADE PART OF THE APPLICABLE INSPECTION/MAINTENANCE PROGRAM FOR THEIR AIRCRAFT. IF A PROCEDURE IS NOT CURRENTLY INCLUDED IN THE OPERATOR'S MANUAL TO INCORPORATE ICA, THIS PROCESS WILL NEED TO BE APPROPRIATELY ADDRESSED (i.e. THE OPERATOR SUBMITS A REVISION TO ITS MAINTENANCE PROGRAM TO THE APPLICABLE CERTIFICATE-HOLDING DISTRICT OFFICE (CHDO).

    c. FOR AIRCRAFT INSPECTED UNDER AN APPROVED AIRCRAFT INSPECTION PROGRAM (AAIP), THE OPERATOR WILL SUBMIT A CHANGE TO THE CHDO IN ACCORDANCE WITH SECTION 135.419B.

    d. FOR AIR CARRIER AIRCRAFT INSPECTED USING AN ANNUAL 100 HOUR INSPECTION PROGRAM, A REFERENCE TO NEW ICA WILL BE MADE IN THE AIRCRAFT's MAINTENANCE RECORD IN ACCORDANCE WITH SECTION 43.9. THIS ENTRY RECORDS THE MAJOR ALTERATION AND IDENTIFIES THE ORIGINAL ICA LOCATION (e.g., ICA ARE LOCATED/ATTACHED TO BLOCK 8 OF FAA FORM 337). IN ADDITION, THE OPERATOR WILL REQUEST A REVISION TO THE OPERATOR'S OPERATIONS SPECIFICATIONS, ADDITIONAL MAINTENANCE REQUIREMENTS, WHICH INCORPORATES THE ICA INTO THE INSPECTION PROGRAM.

U.S. Department of Transportation
Federal Aviation Administration

MAJOR REPAIR AND ALTERATION
(Airframe, Powerplant, Propeller, or Appliance)

Form Approved
OMB No. 2120-0020

For FAA Use Only

Office Identification
SW FSDO 17 BRR

INSTRUCTIONS: Print or type all entries. See FAR 43.9, FAR 43 Appendix B, and AC 43.9-1 (or subsequent revision thereof) for instructions and disposition of this form. This report is required by law (49 U.S.C. 1421). Failure to report can result in a civil penalty not to exceed $1,000 for each such violation (Section 901 Federal Aviation Act of 1958).

1. Aircraft	Make RAYTHEON	Model B200
	Serial No. BB-1668	Nationality and Registration Mark USA N3168F
2. Owner	Name *(As shown on registration certificate)* RAYTHEON AIRCRAFT COMPANY	Address *(As shown on registration certificate)* 9709 E CENTRAL AVE WICHITA, KANSAS 67206-2507

3. For FAA Use Only

4. Unit Identification				5. Type	
Unit	Make	Model	Serial No.	Repair	Alteration
AIRFRAME	********** *(As described in Item 1 above)* **********				X
POWERPLANT					
PROPELLER					
APPLIANCE	Type				
	Manufacturer				

6. Conformity Statement

A. Agency's Name and Address	B. Kind of Agency	C. Certificate No.
RAYTHEON AIRCRAFT SERVICES 1115 PAUL WILKINS ROAD SAN ANTONIO TEXAS 78216	[ ] U.S. Certificated Mechanic [ ] Foreign Certificated Mechanic [X] Certificated Repair Station [ ] Manufacturer	CRS-XA14605K LIMITED AIRFRAME RADIO CLASS I,II,III

D. I certify that the repair and/or alteration made to the unit(s) identified in item 4 above and described on the reverse or attachments hereto have been made in accordance with the requirements of Part 43 of the U.S. Federal Aviation Regulations and that the information furnished herein is true and correct to the best of my knowledge.

Date	Signature of Authorized Individual
12-15-99	MONTY CARROLL Monty Carroll

7. Approval for Return to Service

Pursuant to the authority given persons specified below, the unit identified in item 4 was inspected in the manner prescribed by the Administrator of the Federal Aviation Administration and is [X] APPROVED [ ] REJECTED

BY							
		FAA Flt. Standards Inspector		Manufacturer		Inspection Authorization	Other (Specify)
		FAA Designee	X	Repair Station		Person Approved by Transport Canada Airworthiness Group	

Date of Approval or Rejection	Certificate or Designation No.	Signature of Authorized Individual
12-15-99	CRS-XA14605K	MONTY CARROLL Monty Carroll

FAA Form 337 (12-88)

NOTICE

Weight and balance or operating limitation changes shall be entered in the appropriate aircraft record. An alteration must be compatible with all previous alterations to assure continued conformity with the applicable airworthiness requirements.

8. Description of Work Accomplished

(If more space is required, attach additional sheets. Identify with aircraft nationality and registration mark and date work completed.)

MAKE: RAYTHEON B200 S/N: BB-1668 REG: N3168F DATE: 12-15-99

INSTALLED A BENDIX/KING CAS-66 TRAFFIC ALERT AND COLLISION AVOIDANCE SYSTEM I (TCAS I) CONSISTING OF THE FOLLOWING EQUIPMENT:

MFG/MOD	DESCRIPTION	P/N	WEIGHT	ARM
TPU-66A	TCAS I PROCESSOR	066-01145-0101	17.2	74.0
ALLIEDSIGNAL	PROCESSOR MOUNT KIT	050-03078-0000/0001	3.1	74.0
ANT-67A	TCAS ANTENNA	071-01548-0101	1.8	74.0
ANT-67A	TCAS ANTENNA	071-01548-0101	1.8	154.3
CP-66B	TCAS CONTROLLER	071-01568-0401	1.3	197.5
IVA-81A	TCAS/VSI INDICATOR	066-50001-3104	2.8	133.5

THE BENDIX/KING TCAS I SYSTEM WAS INSTALLED IN ACCORDANCE WITH THE STC #SA115CH ISSUED 09-24-93, AMENDED 04-24-98 AND THE ELLIOTT AVIATION REPORT #EFS TCAS 200 REV. 8, FAA APPROVED ON 11-04-98. THE UPPER TCAS ANTENNA, ADAPTER PLATE, DOUBLER AND THE TCAS I PROCESSOR WERE INSTALLED IN ACCORDANCE WITH THE REPORT #121399-1S REV. IR DATED 12-13-99 AND THE RAYTHEON AIRCRAFT SERVICES DWG. #RAS991209 REV. IR DATED 12-09-99, REFERENCE THE FORM 8110-3 DATED 12-13-99 APPROVED BY VICTOR JUAREZ, DESIGNATED ENGINEERING REPRESENTATIVE, #DERT-710148-SW, STRUCTURES. THE PULL TEST REQUIREMENTS THAT ARE CALLED OUT IN THE STC PAGE 2-8 ARE REFERENCED IN THE REPORT #121399-1S, PAGE 4a OF 12. THE ELECTRICAL WIRING WAS INSTALLED IN ACCORDANCE WITH THE RAYTHEON AIRCRAFT SERVICES DWG. #RAS-49-9915 REV. IR DATED 12-04-99, REFERENCE THE FORM 8110-3 DATED 12-12-99 APPROVED BY ROBERT M. HURLEY, DESIGNATED ENGINEERING REPRESENTATIVE, #DERT-710137-SW, SYSTEMS AND EQUIPMENT. THE AEROSONIC VSI INDICATOR P/N RC-30-V-10-1 S/N 353968 WAS REMOVED FOR THIS INSTALLATION PER THE REQUIREMENTS OF THE STC.

THE BENDIX/KING CAS-66 TCAS I FLIGHT MANUAL SUPPLEMENT, FAA APPROVED ON 10-07-94 HAS BEEN PUT IN THE SUPPLEMENT SECTION OF THE AIRCRAFT FLIGHT MANUAL.

A FUNCTIONAL TEST OF THE EQUIPMENT HAS BEEN PERFORMED IN ACCORDANCE WITH FAR 23.1301, FAR 23.1309 AND CHECKED IN ACCORDANCE WITH FAR 23.1431 FOR OPERATING SATISFACTORILY AND DID NOT ADVERSELY AFFECT OTHER COMPONENTS INSTALLED IN THE AIRCRAFT.

THE AIRCRAFT WEIGHT AND BALANCE FORM AND EQUIPMENT LIST HAVE BEEN REVISED TO REFLECT THIS MODIFICATION AND BOTH FORMS HAVE BEEN INSERTED IN THE AIRCRAFT FLIGHT MANUAL.

----------END----------

[X] Additional Sheets Are Attached

★ U.S. GOVERNMENT PRINTING OFFICE: 1992-769-012/60157

United States of America
Department of Transportation -- Federal Aviation Administration

Supplemental Type Certificate

Number SA115CH

This certificate issued to Elliott Aviation
P. O. Box 100, Quad City Airport
Moline, IL 61266-0100

certifies that the change in the type design for the following product with the limitations and conditions therefor as specified hereon meets the airworthiness requirements of Part 23 *of the* Federal Aviation *Regulations.*

Original Product - Type Certificate Number: A24CE

Make: Beech

Model: 200 ; 300 ; B200 ; B300

Description of Type Design Change:
Installation of Bendix/King CAS-66 Traffic Alert and Collision Avoidance System I (TCAS I) in accordance with Elliott Aviation Report No. EFS TCAS 200, Rev. 7, dated April 1, 1998, or later FAA approved revision.

Limitations and Conditions:

1. Compatibility of this design change with previously approved modifications must be determined by the installer.
2. Elliott Aviation Airplane Flight Manual Supplement, FAA approved September 24, 1993, or later FAA approved revision, must be on board for operation of the modified aircraft.

(See continuation sheet 3 of 3)

This certificate and the supporting data which is the basis for approval shall remain in effect until surrendered, suspended, revoked or a termination date is otherwise established by the Administrator of the Federal Aviation Administration.

Date of application: April 01, 1993

Date of issuance: September 24, 1993

Date reissued:

Date amended: April 24, 1998

By direction of the Administrator

Charles L. Smalley
(*Signature*)

Charles L. Smalley
Manager, Systems & Flight Test Branch
Chicago Aircraft Certification Office

(*Title*)

United States of America
Department of Transportation - Federal Aviation Administration

Supplemental Type Certificate
(Continuation Sheet)

Number SA115CH
Date of Issuance: September 24, 1993
Date Amended: April 24, 1998

Limitations and Conditions (Continued):

3. If the holder agrees to permit another person to use this certificate to alter the product, the holder shall give the other person written evidence of that permission.

. . . END . . .

Elliott Aviation Technical Products Development Inc.
Quad City Airport, PO Box 100
Moline, IL 61266-0100

INSTALLATION

OF THE

BENDIX/KING CAS-66

TRAFFIC ALERT AND COLLISION AVOIDANCE SYSTEM (TCAS-1)

IN BEECH 200, B200, 300, B300 MODEL AIRCRAFT

REPORT NUMBER: EFS TCAS 200

STC NUMBER SA115CH

ORIGINATION DATE: APRIL 1, 1993

F A A
A P P R O V E D
ACE 117C
NOV 0 4 1998 B80
C. . . . AIRCRAFT
CERTIFICATION OFFICE
CENTRAL REGION

REV 8 August 25, 1998 FAA approved Date _____

RECORD OF REVISIONS

REV.	PAGE NO.	DESCRIPTION	DATE
0	ALL	ORIGINAL	APRIL 1.1993
1	I	TITLE PAGE	JULY 12.1993
	II	RECORD OF REVISIONS	
	III	TABLE OF CONTENTS	
	IV	TABLE OF CONTENTS	
	V	ADD TO MASTER DWG LIST	
	1-4	CORRECT GC362A PART NUMBER	
	SECTION 2	REVISE. RENUMBER AND ADD EQUIPMENT LOCATION DWG.	
	SECTION 3	ADD SECTION 3 ANTENNA INSTALLATION	
	4-1	ADD PRESS BLKHD TO DWG	
	4-3	CORRECT KRA-405 PIN b*	
	4-6	CORRECT SPELLING ERROR. CORRECT LABEL	
	4-11	ADD PIN 47 CONNECTION	
	4-12	ADD NOTES PAGE	
	4-13	ADD NOTES AND SYMBOLS PAGE	
	6-2	CHANGE PARAGRAPH E TO 7 NMI	
	SECTION 7	R.F. CABLES SET P/N AND DATA	
	SECTION 8	ADD SECTION 8 STRUCTURAL ANALYSIS	
	9-1	ADD REV 1 TO FMS	
	9-2	ADD REV 1 TO FMS	
	9-4	ADDED PILOT GUIDE P/N	
	9-7	FL MODE CHANGE TO 15 SEC.	
	SECTION 10	BENDIX/KING TCAS 1 MANUAL P/N 006-05370-0000 ADDED TO INDEX. ADD TEMPORARY REVISION 34-01	
2	I	TITLE PAGE	SEPT 15.1993
	II	RECORD OF REVISIONS	
	III	ADDED SECOND PAGE OF REVISIONS	
	IV	RENUMBERED TABLE OF CONTENTS	
	V	RENUMBERED TABLE OF CONTENTS+ADD PG 8-8J	
	VI	RENUMBERED MASTER DRAWING LIST	
	1-4	CORRECT GC362A PART NUMBER	
	2-6	ADDED REFERENCE TO 1.0" HOLE IN FS 84	
	2-12	ADDED. LOCATION. COMM ANTENNA-LOWER	
	4-3	CORRECTED REVERSED KRA-405 PINS K + b	
	4-6	REDUCE AUDIO VOLUME TO 5MW OUTPUT	
	4-11	DELETE CIRCLE MODE LINE	
	8-2D	TYPO CORRECTIONS	
	8-2E	ADDED APPLICABILITY	

FAA APPROVED
SEP 24 1993
CHICAGO AIRCRAFT CERTIFICATION OFFICE CENTRAL REGION
CB

--CONT--

RECORD OF REVISIONS

REV.	PAGE NO.	DESCRIPTION	DATE
2 CONT	8-2F	ELIMINATED NOTE 5	
	8-2G	ADDED 1.0 DIA HOLE FOR WIRING AND UPDATED APPLICABILITY	
	8-2H	ENALARE CONNECTOR HOLES TO 1.125 IN DIA.	
	8-2I	RELOCATED ANTENNA AND ENLARGED ANTENNA HOLES TO 1.125 IN DIA. ADD NOTES.	
	8-2J	ENLARGE CONNECTOR HOLES TO 1.125 IN DIA.	
	8-2K	ENLARGE CONNECTOR HOLES TO 1.125 IN DIA.	
	8-2L	ADD DOUBLER LOCATION NOTE	
	8-3B	REVISE ANALYSIS FOR 1.125 IN DIA HOLES	
	8-3C	REVISE ANALYSIS FOR 1.125 IN DIA HOLES	
	8-3D	REVISE ANALYSIS FOR 1.125 IN DIA HOLES	
	8-5C	REVISE ANANYSIS FOR 1.125 IN DIA HOLES	
	8-8J	REVISE ANALYSIS FOR ADDITION OF 1.0 DIA WIRE FEEDTHROUGH HOLE.	
	8-10A	REVISE ANALYSIS FOR CORRECTED SIZE OF DOUBLER	
	8-13	SUPPLEMENTAL 8110-3. H.D. NEUBERT & ASSOC	
3	I	CHANGE TO REV 3	OCT 1.1993
	III	ADD REV 3 CHANGES	
	2-12	ADD DOUBLER THICKNESS	
	3-1>3-3	RENUMBER AS SECTION 3 & REPRINT CLEARER	
	3-4	RENUMBER AND REWORD PARAGRAPH 3.3.9	
	3-5	RENUMBER AS SECTION 3 & REPRINT CLEARER	
	8-1>8-6	RENUMBER AS SECTION 8 & REPRINT CLEARER	
	8-7	RENUMBER AND NOTED -3 AND -7 PLATE NOT APPROVED	
	8-8>8-10	RENUMBER AS SECTION 8 & REPRINT CLEARER	
4	I	CHANGE TO REV 4	DEC 13.1993
	III>IV	ADD REV 4 CHANGES	
	V>VI	UPDATE TABLE OF CONTENTS FOR REV 4	
	VII	UPDATE MASTER DRAWING LIST FOR REV 4	
	VIII>IX	ADD OPTIONAL CONFIGURATION PAGES FOR APPLICABILITY	
	X>XII	ADD TO AND RENUMBER HINTS	
	1-2	ADD IVA-81A TO COMPONENT CURRENT DRAWS	
	1-3	ADD IVA-81A TO COMPONENT WEIGHTS	
	1-4	ADD IVA-81A TO TSO DATA	
	2-13	ADD INSTALLATION INSTRUCTIONS FOR IVA-81A	
	2-14	ADD TA/RA VSI LOCATION DWG	
	4-12>4-13	ADD TWO WIRING DIAGRAMS	

--CONT--

F.A.A.
APPROVED
MAR 15 1994
CHICAGO AIRCRAFT
CERTIFICATION OFFICE
CENTRAL REGION
CD

Elliott Aviation Technical Products Development, Inc.
Quad City Airport, PO Box 100
Moline, IL 61265

RECORD OF REVISIONS

REV.	PAGE NO.	DESCRIPTION	DATE
4 CONT	4-14>4-15	MOVE AND ADD MORE NOTES	
	4-16	MOVE SYMBOLS	
	5-1	CHANGE WORDING TO "IGNORE EQUIP..."	
	6-1>6-4	REVISE FLIGHT TEST PROCEDURE TO INCLUDE TA/VSI	
	SECTION 9	REV 3 TO FMS FOR TA/VSI EQUIPPED AIRCRAFT	
5	I	CHANGE TO REV 5	AUG 8,1994
	IV	ADD REV 5 TO RECORD OF REVISIONS	
	V-VI	UPDATE AND REPRINT TABLE OF CONTENT	
	VII	UPDATE MASTER DWG LIST (DWG IVA81A)	
	VIII	REPRINT THIS PAGE	
	IX	REPRINT THIS PAGE	
	X	ADD TID-66A APPLICABILITY PAGE	
	XI-XIII	RENUMBER AND REPRINT HINTS PAGE	
	1-2	ADD DATA FOR TID-66A	
	1-3	ADD DATA FOR TID-66A	
	1-4	ADD DATA FOR TID-66A	
	2-13	ADD TID-66A INSTALLATION	
	2-14	REV 5 TO DWG.NO.PANELLOC,ADD TID-66A INSTALLATION LOCATION	
	4-12	REV 5 TO DWG.NO. IVA81A, ADD TID-66A WIRING DIAGRAM	
	4-13	REV 5 TO DWG.NO. TPU66A9, ADDED TID-66A TO NOTE	
	4-14	REPRINT THIS PAGE	
	4-15	UPDATE NOTES FOR PAGES 4-12 AND 4-13	
	SECTION 6	REVISE TO INCLUDE TID-66A	
	SECTION 9	REV 4 TO FMS FOR TID-66A	
6	I	CHANGE TO REV 6	
	IV	ADD REV 6 TO RECORD OF REVISIONS	
	VI	ADD SECTION 11 TO TABLE OF CONTENTS	
	SECTION 11	TPU-66A PROCESSOR ALTERNATE LOCATION	
7	I	CHANGE TO REV 7	04/01/1998
	IV	ADD REV 7 TO RECORD OF REVISIONS	
	VI	UPDATE TABLE OF CONTENTS TO REFLECT REV 7	
	VII	UPDATE DRAWING LIST TO SHOW TCAS CABLES	
	7-1	REMOVE THE FIRST AND SECOND PARAGRAPHS	
	7-2	ADD 200-TCAS1-01 TCAS CABLE DRAWING	
	7-3	ADD 200-TCAS1-02 TCAS CABLE DRAWING	

FAA
APPROVED
ACE-117C
APR 24 1998
CHICAGO AIRCRAFT
CERTIFICATION OFFICE
CENTRAL REGION

Elliott Aviation Technical Products Development Inc.
Quad City Airport, PO Box 100
Moline, IL 61266-0100

RECORD OF REVISIONS

REV.	PAGE NO.	DESCRIPTION	DATE
8	1	Change to Rev 8	08/25/98
	IV-A	add additional page	
	VI	Revise for revision 8	
	VII	Add new cable sets, bulkhead & alt antenna location	
	XIII	Add hints on alternate lower antenna location	
	2-2	Add alternate lower antenna location	
	2-3	Add alternate lower antenna location	
	2-4	Add alternate lower antenna location	
	2-5	Add alternate lower antenna location	
	7-1	Add new RF cable data	
	7-4	Add new cable drawing	
	7-5	Add new cable drawing	
	7-6	Add new cable drawing	
	8-7	Add note for feedthrough	
	8-13	Add alternate bottom antenna doubler	
	8-14	Add alternate bottom doubler rivet pattern	
	8-15	Add alternate bottom doubler location	
	8-16	Add Bulkhead feedthrough location	
	8-17	Add Bulkhead feedthrough drawing	
	8-18	Add Willis & Kaplan report 85-135-1 Rev 0	
	8-19	Add Willis & Kaplan report 88-132-1 Rev 1	

FAA
APPROVED
ACE 117C
NOV 04 1998 BSD
AIRCRAFT
CERTIFICATION OFFICE
CENTRAL REGION

REV 8 August 25, 1998 FAA approved Date _____

TABLE OF CONTENTS

TITLE PAGE I
RECORD OF REVISIONS . . . . . II>IV
TABLE OF CONTENTS . . . . . V>VI
MASTER DRAWING LIST VII
APPLICABILITY FOR RADAR DISPLAY CONFIGURATION. VIII
APPLICABILITY FOR IVA-81A TA/VSI DISPLAY CONFIGURATION IX
APPLICABILITY FOR TID-66A TCAS DISPLAY CONFIGURATION X
INSTALLATION HINTS . . . . . XI>XIII

SECTION 1 GENERAL INFORMATION

REFERENCES 1-1
COMPONENT CURRENT DRAWS 1-2
COMPONENT WEIGHTS 1-3
COMPONENT TSO DATA. 1-4

SECTION 2 INSTALLATION

EQUIPMENT LOCATIONS 2-1
ANTENNA LOCATIONS, 200 2-2
ANTENNA LOCATIONS, B200 2-3
ANTENNA LOCATIONS, 300 2-4
ANTENNA LOCATIONS, B300 2-5
EQUIPMENT LOCATIONS AND WIRE ROUTING 2-6
TPU66A INSTALLATION INSTRUCTIONS 2-7
TPU66A PULL TEST PLAN (NOSE BAY LOCATION). 2-8
GC362A INSTALLATION INSTRUCTIONS 2-9
GC362A PULL TEST PLAN (NOSE BAY LOCATION). 2-10
CP66A INSTALLATION INSTRUCTIONS 2-11
LOCATION, COMM ANTENNA-LOWER. 2-12
INSTALLATION OF IV-81A TA/VSI INDICATOR 2-13
IVA-81 TA/RA VSI INSTALLATION LOCATION. 2-14

SECTION 3 ANTENNA ADAPTER INSTALLATION

ANTENNA ADAPTER INSTALLATION DATA . . . . . 3-1>3-5
DYNAMOLD DMS-4-828 DATA . . . . . 3-6>3-7
FULL SIZE RIVET PATTERN 3-8

SECTION 4 WIRING DIAGRAMS

DWG. NO. CP66A 4-1
DWG. NO. TPU66A1 THRU TPU66A8 . . . . . 4-2>4-9
DWG. NO. ANT67A 4-10
DWG. NO. GC362A 4-11
DWG. NO. IVA81A. 4-12
DWG. NO. TPU66A 4-13
NOTES . . . . . 4-14>4-15
SYMBOLS. 4-16

Elliott Aviation Technical Products Development Inc.
Quad City Airport, PO Box 100
Moline, IL 61266-0100

TABLE OF CONTENTS (CONT.)

SECTION 5 POST INSTALLATION CHECKOUT

INSPECTION AND GROUND CHECKOUT 5-1

SECTION 6 FLIGHT TEST PROCEDURE

FLIGHT TEST PROCEDURE ..... 6-1>6-4

SECTION 7 RF CABLE DATA

RF CABLE SPECIFICATIONS AND DATA 7-1
200-TCAS1-01 CABLE DIAGRAM ..... DWG.NO.CABLE TCAS1-01 7-2
200-TCAS1-02 CABLE DIAGRAM ..... DWG.NO.CABLE TCAS1-02 7-3
200-TCAS1-04 CABLE DIAGRAM ..... DWG.NO. CABLE TCAS1-04 Pg. 7-4
200-TCAS1-05 CABLE DIAGRAM ..... DWG.NO. CABLE TCAS1-05 Pg. 7-5
200-TCAS1-06 CABLE DIAGRAM ..... DWG.NO. CABLE TCAS1-06 Pg. 7-6

SECTION 8 STRUCTURAL ANALYSIS

INTRO AND UPPER TCAS ANTENNA INSTALLATION ..... 8-1>8-2L
UPPER TCAS ANTENNA DETAIL ANALYSIS ..... 8-3>8-3F
LOWER TCAS ANTENNA INSTALLATION 8-4
LOWER TCAS ANTENNA DETAIL ANALYSIS ..... 8-5>8-5D
COAXIAL WIRE FEEDTHROUGH AT F.S.84 ANALYSIS ..... 8-6>8-7
TNC FEEDTHROUGH, F.S. 84 ANALYSIS ..... 8-8>8-8J
COMM ANTENNA RELOCATION/INSTRUCTION 8-9
COMM ANTENNA DOUBLER/STIFFENER ANALYSIS ..... 8-10>8-10E
FORM 8110-3 H.D NEUBERT & ASSOC. 8-11
FORM 8110-3 SCHWARTZ ENGINEERING 8-12
ALTERNATE BOTTOM ANTENNA LOCATION DOUBLER 8-13
ALTERNATE LOCATION DOUBLER RIVET PATTERN 8-14
ALTERNATE BOTTOM ANTENNA INSTALLED LOCATION 8-15
BULKHEAD FEED THRU LOCATION 8-16
BULKHEAD FEED THRU DETAILED DRAWING 8-17
WILLIS & KAPLAN, REPORT & 8110-3 FOR ALTERNATE DOUBLER LOCATION 8-18 (1-20)
WILLIS & KAPLAN, REPORT & 8110-3 FOR BULKHEAD FEED THRU LOCATION 8-19 (1-9)

SECTION 9 FLIGHT MANUAL SUPPLEMENT

FAA APPROVED FLIGHT MANUAL SUPPLEMENT ..... 1-8 >8-8

SECTION 10 BENDIX KING TPU-66A MANUAL

SECTION 11 TPU66A PROCESSOR ALTERNATE LOCATION

EQUIPMENT LOCATION AND WIRE ROUTING 11-1
INSTALLATION OF TPU66A IN AFT FUSELAGE 11-2
CP66B CONTROL PANEL INSTALLATION 11-2
GROUND OPERATION CHECKOUT 11-3
FIGURES:
- EQUIPMENT LOCATIONS 11-4
- TPU66A AFT MOUNTING LOCATION 11-5
- CP66B CONTROL PANEL LOCATION 11-6
- AFT PRESSURE BULKHEAD FEEDTHROUGH 11-7
- WIRING INTERCONNECT DIAGRAM #1 11-8
- WIRING INTERCONNECT DIAGRAM #2 11-9
- HARDWARE LIST (SECTION 11) 11-10

F.A.A.
APPROVED
ACE-117C
NOV 04 1998 BSD

Elliott Aviation Technical Products Development Inc.
Quad City Airport, PO Box 100
Moline, IL 61266-0100

MASTER DRAWING LIST

PAGE NO.	DWG.NO.	DESCRIPTION
2-1	SHELFLOC	EQUIPMENT LOCATION, NOSE & PEDESTAL
2-14	PANALLOC	IVA-81A OR TID-66A PANEL LOCATION
3-8	RIVPTN	ACTUAL SIZE RIVET PATTERN, TOP ANTENNA
7-2	CABLE TCAS1-01	200-TCAS1-01 ANTENNA CABLE DRAWING
7-3	CABLE TCAS1-02	200-TCAS1-02 ANTENNA CABLE DRAWING
7-4	CABLE TCAS1-04	200-TCAS1-04 ANTENNA CABLE DRAWING
7-5	CABLE TCAS1-05	200-TCAS1-05 ANTENNA CABLE DRAWING
7-6	CABLE TCAS1-06	200-TCAS1-06 ANTENNA CABLE DRAWING
8-13	BOT DOB 1-3	ALTERNATE LOWER ANTENNA DOUBLER
8-14	BOT DOB 2-3	ALTERNATE LOWER ANTENNA DOUBLER RIVET PATTERN
8-15	BOT DOB 3-3	ALTERNATE LOWER ANTENNA INSTALLATION
8-16	BULKHEAD	BULKHEAD FEED THRU LOCATION
8-17	FPB DOUBLER	BULKHEAD FEED THRU DETAILED DRAWING
	WIRING DIAGRAM	
4-1	CP66A	CONTROL PANEL
4-2	TPU66A1	TCAS POWER, ATTITUDE,HEADING
4-3	TPU66A2	TCAS 26VAC REF, RADIO ALT
4-4	TPU66A3	TCAS ALTITUDE INPUT
4-5	TPU66A4	TCAS STRAPS AND DISCRETES
4-6	TPU66A5	JUMPER PLUG A - RADAR DISPLAY
4-7	TPU66A6	TCAS AUDIO INTERFACE, SUPPRESSION
4-8	TPU66A7	TCAS DIAGNOSTIC/DATA RECORDER
4-9	TPU66A8	MODE S ADDRESS (EXAMPLE)
4-10	ANT67A	TCAS DIRECTIONAL ANTENNAS
4-11	GC362A	RADAR GRAPHICS ADAPTER
4-12	IVA81A	IVA-81A TA/VSI INDICATOR AND TID-66A TRAFFIC DISPLAY
4-13	TPU66A9	JUMPER PLUG A-TA/VSI DISPLAY
	STRUCTURAL DIAGRAMS	
2-12	200-091493	LOCATION COMM ANTENNA LOWER
8-2D	200-062593 1of4	STA 84.00 BULKHEAD-REINFORCEMENT
8-2E	200-062593 2of 4	"
8-2F	200-062593 3of4	"
8-2G	200-062593 4of4	"
8-2H	200-072993	LOCATION, ANTENNA HOLES UPPER
8-2I	200-082493	LOCATION, ANTENNA LOWER HOLES
8-2J	200-072893	LOCATION, ADAPTER UPPER
8-2K	200-073093	INSTALLATION, ADAPTER ANT-81A UPPER
8-2L	200-082393	PATCH, NON-STRUCTURAL, EXIST.HOLE

FAA
APPROVED
ACE-117C
NOV 14 1998
BSD
AIRCRAFT
CERTIFICATION OFFICE
CENTRAL REGION

APPLICABILITY

RADAR DISPLAY CONFIGURATION

THE FOLLOWING DRAWINGS ARE APPLICABLE TO ALL INSTALLATIONS USING THE RADAR INDICATOR ONLY FOR TCAS I DISPLAY.

PAGE NO.	DWG. NO.	DESCRIPTION
2-1	SHELFLOC	EQUIPMENT LOCATIONS, NOSE + PEDESTAL
3-8	RIVPTN	ACTUAL SIZE RIVET PATTERN, TOP ANT.
	WIRING DIAGRAMS	
4-1	CP66A	CONTROL PANEL
4-2	TPU66A1	TCAS POWER, ATTITUDE, HEADING
4-3	TPU66A2	TCAS 26VAC REF, RADIO ALT
4-4	TPU66A3	TCAS ALTITUDE INPUT
4-5	TPU66A4	TCAS STRAPS AND DISCRETES
4-6	TPU66A5	JUMPER PLUG A - RADAR DISPLAY
4-7	TPU66A6	TCAS AUDIO INTERFACE, SUPPRESSION
4-8	TPU66A7	TCAS DIAGNOSTIC/DATA RECORDER
4-9	TPU66A8	MODE S ADDRESS (EXAMPLE)
4-10	ANT67A	TCAS DIRECTIONAL ANTENNAS
4-11	GC362A	RADAR GRAPHICS ADAPTER
	STRUCTURAL DIAGRAMS	
2-12	200-091493	LOCATION, COMM ANTENNA-LOWER
8-2D	200-062593 1of4	STA 84.00 BULKHEAD-REINFORCEMENT
8-2E	200-062593 2of4	"
8-2F	200-062593 3of4	"
8-2G	200-062593 4of4	"
8-2H	200-072993	LOCATION, ANTENNA HOLES-UPPER
8-2I	200-082493	LOCATION, ANTENNA-LOWER, HOLES
8-2J	200-072893	LOCATION, ADAPTER-UPPER
8-2K	200-073093	INSTALLATION, ADAPTER ANT-81A-UPPER
8-2L	200-082393	PATCH, NON-STRUCTURAL, EXIST. HOLE

EQUIPMENT REQUIRED:

1 ea - TPU-66A TCAS PROCESSOR
P/N 066-01145-0101
1 ea - CP-66A CONTROL PANEL
P/N 071-01547-0101
2 ea - ANT-67A DIRECTIONAL ANTENNA
P/N 071-01548-0101
1 ea - GC-362A GRAPHICS ADAPTER
P/N 071-02978-0102

APPLICABILITY

IVA-81A TA/VSI DISPLAY CONFIGURATION

THE FOLLOWING DRAWINGS ARE APPLICABLE TO ALL INSTALLATIONS USING A PILOTS IVA-81A TA/VSI ONLY FOR TCAS I DISPLAY.

PAGE NO.	DWG. NO.	DESCRIPTION
2-1	SHELFLOC	EQUIPMENT LOCATIONS, NOSE + PEDESTAL
2-14	PANELLOC	TA/RA VSI INSTALLATION LOCATION
3-8	RIVPTN	ACTUAL SIZE RIVET PATTERN, TOP ANT.

WIRING DIAGRAMS

4-1	CP66A	CONTROL PANEL
4-2	TPU66A1	TCAS POWER, ATTITUDE, HEADING
4-3	TPU66A2	TCAS 26VAC REF, RADIO ALT
4-4	TPU66A3	TCAS ALTITUDE INPUT
4-5	TPU66A4	TCAS STRAPS AND DISCRETES
4-7	TPU66A6	TCAS AUDIO INTERFACE, SUPPRESSION
4-8	TPU66A7	TCAS DIAGNOSTIC/DATA RECORDER
4-9	TPU66A8	MODE S ADDRESS (EXAMPLE)
4-10	ANT67A	TCAS DIRECTIONAL ANTENNAS
4-12	IVA81A	IVA-81A TA/VSI INDICATOR AND TID-66A TCAS DISPLAY
4-13	TPU66A9	JUMPER PLUG A - TA/VSI DISPLAY

STRUCTURAL DIAGRAMS

2-12	200-091493	LOCATION, COMM ANTENNA-LOWER
8-2D	200-062593 1of4	STA 84.00 BULKHEAD-REINFORCEMENT
8-2E	200-062593 2of4	"
8-2F	200-062593 3of4	"
8-2G	200-062593 4of4	"
8-2H	200-072993	LOCATION, ANTENNA HOLES-UPPER
8-2I	200-082493	LOCATION, ANTENNA-LOWER, HOLES
8-2J	200-072893	LOCATION, ADAPTER-UPPER
8-2K	200-073093	INSTALLATION, ADAPTER ANT-81A-UPPER
8-2L	200-082393	PATCH, NON-STRUCTURAL, EXIST. HOLE

EQUIPMENT REQUIRED:

1 ea - TPU-66A TCAS PROCESSOR
P/N 066-01145-0101
1 ea - CP-66A CONTROL PANEL
P/N 071-01547-0401
2 ea - ANT-67A DIRECTIONAL ANTENNA
P/N 071-01548-0101
1 ea - IVA-81A TA/RA VSI INDICATOR
P/N 066-50001-3104

APPLICABILITY

TID-66A TRAFFIC DISPLAY CONFIGURATION

THE FOLLOWING DRAWINGS ARE APPLICABLE TO ALL INSTALLATIONS USING A TID-66A TRAFFIC DISPLAY ONLY FOR TCAS I DISPLAY.

PAGE NO.	DWG. NO.	DESCRIPTION
2-1	SHELFLOC	EQUIPMENT LOCATIONS, NOSE + PEDESTAL
2-14	PANELLOC	TA/RA VSI INSTALLATION LOCATION
3-8	RIVPTN	ACTUAL SIZE RIVET PATTERN, TOP ANT.

WIRING DIAGRAMS

4-1	CP66A	CONTROL PANEL
4-2	TPU66A1	TCAS POWER, ATTITUDE, HEADING
4-3	TPU66A2	TCAS 26VAC REF, RADIO ALT
4-4	TPU66A3	TCAS ALTITUDE INPUT
4-5	TPU66A4	TCAS STRAPS AND DISCRETES
4-7	TPU66A6	TCAS AUDIO INTERFACE, SUPPRESSION
4-8	TPU66A7	TCAS DIAGNOSTIC/DATA RECORDER
4-9	TPU66A8	MODE S ADDRESS (EXAMPLE)
4-10	ANT67A	TCAS DIRECTIONAL ANTENNAS
4-12	IVA81A	IVA-81A TA/VSI INDICATOR AND TID-66A TRAFFIC DISPLAY
4-13	TPU66A9	JUMPER PLUG A - TA/VSI DISPLAY

STRUCTURAL DIAGRAMS

2-12	200-091493	LOCATION, COMM ANTENNA-LOWER
8-2D	200-062593 1of4	STA 84.00 BULKHEAD-REINFORCEMENT
8-2E	200-062593 2of4	"
8-2F	200-062593 3of4	"
8-2G	200-062593 4of4	"
8-2H	200-072993	LOCATION, ANTENNA HOLES-UPPER
8-2I	200-082493	LOCATION, ANTENNA-LOWER, HOLES
8-2J	200-072893	LOCATION, ADAPTER-UPPER
8-2K	200-073093	INSTALLATION, ADAPTER ANT-81A-UPPER
8-2L	200-082393	PATCH, NON-STRUCTURAL, EXIST. HOLE

EQUIPMENT REQUIRED:

1 ea - TPU-66A TCAS PROCESSOR
P/N 066-01145-0101
1 ea - CP-66A CONTROL PANEL
P/N 071-01547-0401
2 ea - ANT-67A DIRECTIONAL ANTENNA
P/N 071-01548-0101
1 ea - TID-66A TRAFFIC DISPLAY
P/N 066-50011-0201

***** READ THIS BEFORE DOING THE INSTALLATION *****

EFS TCAS 200 INSTALLATION HINTS

1. SYSTEM CONFIGURATION

THIS STC COVERS THREE POSSIBLE CONFIGURATIONS FOR THE DISPLAY OF TCAS I TRAFFIC INFORMATION:

- TCAS ON THE EXISTING RADAR INDICATOR. SEE PAGE VIII FOR APPLICABILITY OF WIRING DIAGRAMS AND EQUIPMENT REQUIRED.
- TCAS DISPLAYED ON SINGLE IVA-81A TA/RA VSI. TA/RA VSI INSTALLED IN PLACE OF THE PILOTS IVSI. SEE PAGE IX FOR APPLICABILITY OF WIRING DIAGRAMS AND EQUIPMENT REQUIRED.
- TCAS DISPLAYED ON A TID-66A TRAFFIC DISPLAY DEDICATED SOLELY TO THE TCAS I SYSTEM. SEE PAGE X FOR APPLICABILITY OF WIRING DIAGRAMS AND EQUIPMENT REQUIRED.

2. TOP DIRECTIONAL ANTENNA

THE TOP TCAS DIRECTIONAL ANTENNA LOCATION (FS 150.00) IS THE NEXT BULKHEAD AFT OF THE LAP JOINT ON TOP OF THE COCKPIT. THIS LARGE VISIBLE LAP JOINT IS THE BEST REFERENCE FOR LOCATING THE CORRECT TOP DIRECTIONAL ANTENNA LOCATION.

BEFORE DRILLING **ANY** HOLES IN THE SKIN FOR THE TOP ADAPTER PLATE LAY OUT THE INTERNAL STRUCTURE ON THE OUTSIDE SKIN USING THE EXISTING RIVETS AS A REFERENCE. THIS WILL PREVENT DRILLING ON EDGES, HALF THROUGH EXISTING RIVETS ETC. **REMEMBER** RIVET LOCATION MAY BE ADJUSTED ONLY IN ACCORDANCE WITH NOTE 2, PAGE 8-2K, DWG.NO. 200-073093.

YOUR AIRCRAFT MAY HAVE THREE ROUNDHEAD SCREWS IN A TRIANGULAR PATTERN ON THE CENTERLINE THAT INTERFERE WITH THE ADAPTER PLATE. THESE SCREWS WERE SOMETIMES INSTALLED AS A PROVISION FOR AN HF RADIO ANTENNA. THEY MAY BE REPLACED WITH COUNTERSUNK SCREWS IN THE SAME MANNER THE BOTTOM SCREW HOLES FROM THE REMOVED COMM ANTENNA ARE FILLED WITH COUNTERSUNK SCREWS. THIS IS ASSUMING THESE SCREWS ARE NOT USED. REF. PAGE 8-2L, DWG. NO. 200-082393.

DON'T BE AFRAID TO ORDER EXTRA DYNAMOLD MOLDABLE SHIM. IT IS NOT VERY EXPENSIVE AND THE SHELF LIFE IS 3 YEARS. WE USED TWO 100 GRAM FIELD KITS.

EFS TCAS 200 INSTALLATION HINTS (CONT)

3. BOTTOM TCAS DIRECTIONAL ANTENNA

THE EXISTING BOTTOM COMM ANTENNA IS REMOVED AND THE EXISTING DOUBLER (MASSIVE) IS USED FOR THE INSTALLATION OF THE BOTTOM TCAS DIRECTIONAL ANTENNA.

THE REAR TCAS ANTENNA MOUNTING SCREWS GO THROUGH THE FLANGE OF FS 158.00 BULKHEAD. THE TCAS ANTENNA IS ACTUALLY ONE BAY AFT OF WHERE THE COMM ANTENNA CONNECTOR HOLE IS LOCATED.

THE POSITION OF THE ANTENNA SIDE TO SIDE IS TO LINE UP CENTERLINE TO CENTERLINE WITH THE OLD COMM ANTENNA LOCATION. THIS KEEPS THE EXISTING NUTPLATES FROM INTERFERING WITH THE TCAS ANTENNA CONNECTOR HOLES IN THE FUSELAGE.

THE PATCH OVER THE OLD COMM ANTENNA CONNECTOR HOLE SHOULD HAVE A DISK OF ALUMINUM RIVETED TO IT TO PROVIDE A FLUSH PATCH WITH THE OUTSIDE SKIN.

4. EQUIPMENT MOUNTING

THE TCAS PROCESSOR INSTALLATION AND THE GRAPHICS ADAPTER INSTALLATION MUST BE PULL TESTED.

IF THE TCAS PROCESSOR INSTALLATION LOCATION IS DIFFERENT THAN THAT SHOWN IN THE STC PACKAGE THE RF CABLES SET MAY NEED TO BE REDESIGNED TO ACCOMMODATE ANY CHANGE IN LENGTH REQUIRED FROM FS 84.00 FEEDTHROUGHS TO THE PROCESSOR. WHEN ORDERING THE CABLE SET PLEASE BE SURE AND SPECIFY IN WRITING ANY CHANGE NEEDED IN THIS LENGTH AND THE INTENDED INSTALLATION LOCATION.

A COMPLETE TEST REPORT AND A CABLE ASSEMBLY CERTIFICATION WILL ACCOMPANY EVERY RF CABLE SET.

EFS TCAS 200 INSTALLATION HINTS (CONT)

3. BOTTOM TCAS DIRECTIONAL ANTENNA

THE EXISTING COMM ANTENNA IS REMOVED AND THE EXISTING DOUBLER (MASSIVE) IS USED FOR THE INSTALLATION OF THE BOTOM TCAS DIRECTIONAL ANTENNA.

THE REAR TCAS ANTENNA MOUNTING SCREWS GO THROUGH THE FLANGE OF FS. 158.00 BULKHEAD. THE TCAS ANTENNA IS ACTUALLY ONE BAY AFT OF WHERE THE COMM ANTENNA CONNECTOR HOLE IS LOCATED.

THE POSITION OF THE ANTENNA SIDE TO SIDE IS TO LINE UP CENTERLINE TO CENTERLINE WITH THE OLD COMM ANTENNA LOCATION. THIS KEEPS THE EXISTING NUTPLATES FROM INTERFERING WITH THE TCAS ANTENNA CONNECTOR HOLES IN THE FUSELAGE.

THE PATCH OVER THE OLD COMM ANTENNA CONNECTOR HOLE SHOULD HAVE A DISK OF ALUMINUM RIVETED TO IT TO PROVIDE A FLUSH PATCH WITH THE OUTSIDE SKIN.

3A. ALTERNATE BOTTOM DIRECTIONAL ANTENNA LOCATION

WHEN THE ALTERNATE MOUNTING LOCATION IS USED (JUST AFT OF THE MAIN SPAR REF DWG.NO. BOT DOB 3-3 PAGE 8-15) THE COMM ANTENNA WILL NOT HAVE TO BE RELOCATED. BUILD AND INSTALL THE ANTENNA DOUBLER AS SHOWN ON PAGES 8-13 THRU 8-15. WHEN THE DOUBLER IS INSTALLED SEAL THE AREA WITH PS890B ½ OR EQUIVALENT PRESSURE SEALENT.

4. EQUIPMENT MOUNTING

THE TCAS PROCESSOR INSTALLATION AND THE GRAPHICS ADAPTER INSTALLATION MUST BE PULL TESTED.

IF THE TCAS PROCESSOR INSTALLATION LOCATION IS DIFFERENT THAN THAT SHOWN IN THE STC PACKET THE RF CABLE SET MAY NEED TO BE REDESIGNED TO ACCOMMODATE ANY CHANGES IN THE LENGTH REQUIRED FROM FS 84.00 FEED THROUGHS TO THE PROCESSOR. WHEN ORDERING THE CABLE SET PLEASE BE SURE AND SPECIFY IN WRITING ANY CHANGES NEEDED IN THIS LENGTH AND THE INTENDED INSTALLATION LOCATION.

A COMPLETE TEST REPORT AND A CABLE ASSEMBLY CERTIFICATION WILL ACCOMPANY EVERY RF CABLE SET.

WHEN THE FORWARD PRESSURE BULKHEAD FEED THROUGH (AS SHOWN ON PAGE 8-16 & 8-17) IS USED YOU CAN INSTALL A CABLE SET THAT DOES NOT REQUIRE TNC BULKHEAD FEED THROUGHS FROM THE PROCESSOR TO THE ANTENNAS.

99-0368-S

U.S. DEPARTMENT OF TRANSPORTATION FEDERAL AVIATION ADMINISTRATION **STATEMENT OF COMPLIANCE WITH THE FEDERAL AVIATION REGULATIONS**			DATE 12/13/99
AIRCRAFT OR AIRCRAFT COMPONENT IDENTIFICATION			
MAKE BEECHCRAFT	MODEL NO. B200	TYPE (Airplane, Radio, Helicopter, etc.) Airplane	NAME OF APPLICANT RAYTHEON AIRCRAFT SERVICES

LIST OF DATA

IDENTIFICATION	TITLE
Report Number: 121399-1S Rev. IR Date: 12/13/99	Structural Substantiation of TCAS Antenna Installation in BEECHCRAFT Model B200, AC Reg. No. N3168F, S/N BB-1668 NOTES: (1) The electrical portions of the installation will require separate approval. (2) Raytheon Drawing No. RAS991209 defines the modified installation. (3) Raytheon Drawing No. RAS991209 is included in Pages 5 through 12 of the listed report.

PURPOSE OF DATA

APPROVE STRUCTURES DATA ONLY IN SUPPORT OF MAJOR ALTERATION S/N BB-1668.

APPLICABLE REQUIREMENTS *(List specific sections)*

FAR's 23.301 THROUGH 23.341, 23.471, 23.561, 23.601 THROUGH 23.615, 23.571

CERTIFICATION - Under authority vested by direction of the Administrator and in accordance with conditions and limitations of appointment under Part 183 of the Federal Aviation Regulations, data listed above and on attached sheets numbered NONE have been examined in accordance with established procedures and found to comply with applicable requirements of the Federal Aviation Regulations.

I (We) therefore ☐ Recommend approval of these data

☒ Approve these data

SIGNATURE(S) OF DESIGNATED ENGINEERING REPRESENTATIVE(S)	DESIGNATION NUMBER(S)	CLASSIFICATION(S)
Victor Juarez	DERT-710148-SW	Structures

FAA Form 8110-3 (11-70) SUPERSEDES PREVIOUS EDITION (Computer Generated)

069

U.S. DEPARTMENT OF TRANSPORTATION
FEDERAL AVIATION ADMINISTRATION

STATEMENT OF COMPLIANCE WITH THE FEDERAL AVIATION REGULATIONS

DATE: 12/12/99

AIRCRAFT OR AIRCRAFT COMPONENT IDENTIFICATION

MAKE	MODEL NO.	TYPE (Airplane, Radio, Helicopter, etc.)	NAME OF APPLICANT
Beechcraft	200	Airplane	Raytheon Aircraft Services

LIST OF DATA

IDENTIFICATION	TITLE
RAS-49-9915 Rev IR Dated 12/04/99	TCAS CAS-66A STC Deviations
RAS-32-9913 Rev IR Dated 11/15/99	UNS-1K GPS System with EFIS-84

Note: This approval is for the Electrical aspects of the engineering design data only, and is not installation approval.
Approval for aircraft S/N BB-1668 only.
Approval of TCAS minor deviations only to FAA STC SA115CH.
After modification is complete, perform EMI/RFI test in accordance with Raytheon report RAS-GF-9714, EMI/RFI Test Procedure.

PURPOSE OF DATA

In support of a modification to install A TCAS and GPS in serial number BB-1668.

APPLICABLE REQUIREMENTS (List specific sections)

FAR 23.1301 a,b,c
FAR 23.1307 b3
FAR 23.1329 h
FAR 23.1359 c
FAR 23.1431 b

CERTIFICATION - Under authority vested by direction of the Administrator and in accordance with conditions and limitations of appointment under Part 183 of the Federal Aviation Regulations, data listed above and on attached sheets numbered NONE have been examined in accordance with established procedures and found to comply with applicable requirements of the Federal Aviation Regulations.

I (We) Therefore
☐ Recommend approval of these data
☒ Approve these data

SIGNATURE(S) OF DESIGNATED ENGINEERING REPRESENTATIVE(S)	DESIGNATION NUMBERS(S)	CLASSIFICATION(S)
Robert M. Hurley	DERT-710137-SW	Systems & Equipment

FAA Form 8110-3 (11-70) SUPERSEDES PREVIOUS EDITION GPO 901-613

Form Approved
O.M.B. No. 2120-0018

U.S. Department of Transportation
Federal Aviation Administration

APPLICATION FOR AIRWORTHINESS CERTIFICATE

INSTRUCTIONS - Print or type. Do not write in shaded areas; these are for FAA use only. Submit original only to an authorized FAA Representative. If additional space is required, use an attachment. For special flight permits complete Sections II and VI or VII as applicable

I. AIRCRAFT DESCRIPTION

1. REGISTRATION MARK: N3168F	2. AIRCRAFT BUILDER'S NAME (Make): RAYTHEON AIRCRAFT COMPANY	3. AIRCRAFT MODEL DESIGNATION: B200	4. YR. MFR: 1999
5. AIRCRAFT SERIAL NO.: BB-1668	6. ENGINE BUILDER'S NAME (Make): Pratt & Whitney Canada	7. ENGINE MODEL DESIGNATION: PT6A-42	FAA CODING: 7150006 52032
8. NUMBER OF ENGINES: 2	9. PROPELLER BUILDER'S NAME (Make): Hartzell	0. PROPELLER MODEL DESIGNATION: HC-E4N-3G	11. AIRCRAFT IS (Check if applicable): IMPORT

II. CERTIFICATION REQUESTED

APPLICATION IS HEREBY MADE FOR: (Check applicable items

A	1	X	STANDARD AIRWORTHINESS CERTIFICATE (Indicate category)	X	NORMAL		UTILITY		ACROBATIC		TRANSPORT		GLIDER		BALLOON
B			SPECIAL AIRWORTHINESS CERTIFICATE (Check appropriate items)												
	2		LIMITED												
	5		PROVISIONAL (Indicate class)	1		CLASS I									
				2		CLASS II									
	3		RESTRICTED (Indicate operation(s) to be conducted)	1		AGRICULTURE AND PEST CONTROL		2		AERIAL SURVEYING		3		AERIAL ADVERTISING	
				4		FOREST (Wildlife conservation)		5		PATROLLING		6		WEATHER CONTROL	
				7		CARRIAGE OF CARGO		0		OTHER (Specify)					
	4		EXPERIMENTAL (Indicate operation(s) to be conducted)	1		RESEARCH AND DEVELOPMENT		2		AMATEUR BUILT		3		EXHIBITION	
				4		RACING		5		CREW TRAINING				MKT. SURVEY	
				0		TO SHOW COMPLIANCE WITH FAR									
	8		SPECIAL FLIGHT PERMIT (Indicate operation to be conducted. then complete Section VI or VII as applicable on reverse side)	1		FERRY FLIGHT FOR REPAIRS, ALTERATIONS, MAINTENANCE OR STORAGE									
				2		EVACUATE FROM AREA OF IMPENDING DANGER									
				3		OPEATION IN EXCESS OF MAXIMUM CERTIFICATED TAKE-OFF WEIGHT									
				4		DELIVERING OR EXPORT		5		PRODUCTION FLIGHT TESTING					
				6		CUSTOMER DEMONSTRATION FLIGHTS									
C	6		MULTIPLE AIRWORTHINESS CERTIFICATE (Check ABOVE "Restricted Operation" and "Standard" or "Limited." as applicable.)												

III. OWNER'S CERTIFICATION

A. REGISTERED OWNER (As shown on certificate of aircraft registration) — IF DEALER, CHECK HERE → X

NAME	ADDRESS
RAYTHEON AIRCRAFT COMPANY	P.O. BOX 85 WICHITA, KS 67201

B. AIRCRAFT CERTIFICATION BASIS (Check applicable blocks and complete items as indicated)

X	AIRCRAFT SPECIFICATION OR TYPE CERTIFICATE DATA SHEET (Give No. and Revision No.) A24CE, Rev. 70	X	AIRWORTHINESS DIRECTIVES (Check if all applicable AD's complied with and give latest AD No.) ISSUE 99-15
	AIRCRAFT LISTING (Give page number(s)) N/A		SUPPLEMENTAL TYPE CERTIFICATE (List number of each STC incorporated) N/A

C. AIRCRAFT OPERATION AND MAINTENANCE RECORDS

X	CHECK IF RECORDS IN COMPLIANCE WITH FAR 91.~~473~~, 417	TOTAL AIRFRAME HOURS 7:55	3 EXPERIMENTAL ONLY (Enter hours flown since last certificate issued or renewed) N/A

D. CERTIFICATION — I hereby certify that I am the registered owner (or his agent) of the aircraft described above; that the aircraft is registered with the Federal Aviation Administration in accordance with Section 501 of the Federal Aviation Act of 1958, and applicable Federal Aviation Regulations; and that the aircraft has been inspected and is airworthy and eligible for the airworthiness certificate requested.

DATE OF APPLICATION	NAME AND TITLE (Print or type)	SIGNATURE
07-30-99	Eugene Hainstock-Administrative Staff QA	

IV. INSPECTION AGENCY VERIFICATION

A. THE AIRCRAFT DESCRIBED ABOVE HAS BEEN INSPECTED AND FOUND AIRWORTHY BY: (Complete this Section only if FAR 21.183(d) applies)

2		FAR PART 121 OR 127 CERTIFICATE HOLDER (Give Certificate No.)	3		CERTIFICATED MECHANIC (Give Certificate No.)	6		CERTIFICATED REPAIR STATION (Give Certificate No.)
5		AIRCRAFT MANUFACTURER (Give name of firm)						

DATE	TITLE	SIGNATURE

V. FAA REPRESENTATIVE CERTIFICATION

(Check ALL applicable blocks in items A and B)

A. I find that the aircraft described in Section I or VII meets requirements for:

	X	THE CERTIFICATE REQUESTED
4		AMENDMENT OR MODIFICATION OF CURRENT AIRWORTHINESS CERTIFICATE

B. Inspection for a special permit under Section VII was conducted by:

	FAA INSPECTOR		FAA DESIGNEE		
	CERTIFICATE HOLDER UNDER:		FAR 65	FAR 121, 127 OR 135	FAR 145

DATE	DISTRICT OFFICE		DESIGNEE'S SIGNATURE AND NO.		FAA INSPECTOR'S SIGNATURE
07-30-99	CE-43	4	Robert Alliband, DOA, PC#8	1	

FAA Form 8130-6 (11-88) SUPERSEDES PREVIOUS EDITION

*U.S. GPO:1989-241-672/90913

VI. PRODUCTION FLIGHT TESTING

A. MANUFACTURER

NAME	ADDRESS

B. PRODUCTION BASIS *(Check applicable item)*

- [ ] PRODUCTION CERTIFICATE *(Give production certificate number)*
- [ ] TYPE CERTIFICATE ONLY
- [ ] APPROVED PRODUCTION INSPECTION SYSTEM

C. GIVE QUANTITY OF CERTIFICATES REQUIRED FOR OPERATING NEEDS →

DATE OF APPLICATION	NAME AND TITLE *(Print or type)*	SIGNATURE

VII. SPECIAL FLIGHT PERMIT PURPOSES OTHER THAN PRODUCTION FLIGHT TEST

A. DESCRIPTION OF AIRCRAFT

	REGISTERED OWNER	ADDRESS
	BUILDER *(Make)*	MODEL
	SERIAL NUMBER	REGISTRATION MARK

B. DESCRIPTION OF FLIGHT — CUSTOMER DEMONSTRATION FLIGHTS ☐ *(Check if applicable)*

	FROM	TO	
	VIA	DEPARTURE DATE	DURATION

C. CREW REQUIRED TO OPERATE THE AIRCRAFT AND ITS EQUIPMENT

- [ ] PILOT
- [ ] CO-PILOT
- [ ] NAVIGATOR
- [ ] OTHER *(Specify)*

D. THE AIRCRAFT DOES NOT MEET THE APPLICABLE AIRWORTHINESS REQUIREMENTS AS FOLLOWS:

E. THE FOLLOWING RESTRICTIONS ARE CONSIDERED NECESSARY FOR SAFE OPERATION *(Use attachment if necessary)*

F. CERTIFICATION — I hereby certify that I am the registered owner (or his agent) of the aircraft described above; that the aircraft is registered with the Federal Aviation Administration in accordance with Section 501 of the Federal Aviation Act of 1958, and applicable Federal Aviation Regulations; and that the aircraft has been inspected and is airworthy for the flight described.

DATE	NAME AND TITLE *(Print or type)*	SIGNATURE

VIII. AIRWORTHINESS DOCUMENTATION (FAA use only)

X	A. Operating Limitations and Markings in Compliance with FAR 91.9 91.~~31~~-9 as Applicable		G. Statement of conformity, FAA Form 8130-9 *(Attach when required)*
	B. Current Operating Limitations Attached		H. Foreign Airworthiness Certification for Import Aircraft *(Attach when required)*
	C. Data, Drawing, Photographs, etc. *(Attached when required)*		I. Previous Airworthiness Certificate Issued in Accordance with FAR ____ CAR ____ *(Original Attached)*
X	D. Current Weight and Balance Information Available in Aircraft		
	E. Major Repair and Alteration, FAA Form 337 *(Attached when required)*	X	J. Current Airworthiness Certificate Issued in Accordance with FAR 21.183 (a) per 21.273 (Copy *attached)*
X	F. This inspection Recorded in Aircraft Records		

UNITED STATES OF AMERICA

DEPARTMENT OF TRANSPORTATION—FEDERAL AVIATION ADMINISTRATION

STANDARD AIRWORTHINESS CERTIFICATE

1 NATIONALITY AND REGISTRATION MARKS	2 MANUFACTURER AND MODEL	3. AIRCRAFT SERIAL NUMBER	4 CATEGORY
N3168F	RAYTHEON AIRCRAFT COMPANY B200	BB-1668	NORMAL

5. AUTHORITY AND BASIS FOR ISSUANCE

This airworthiness certificate is issued pursuant to the Federal Aviation Act of 1958 and certifies that, as of the date of issuance, the aircraft to which issued has been inspected and found to conform to the type certificate therefor, to be in condition for safe operation, and has been shown to meet the requirements of the applicable comprehensive and detailed airworthiness code as provided by Annex 8 to the Convention on International Civil Aviation, except as noted herein.

Exceptions:

NONE

6 TERMS AND CONDITIONS

Unless sooner surrendered, suspended, revoked, or a termination date is otherwise established by the Administrator, this airworthiness certificate is effective as long as the maintenance, preventative maintenance, and alterations are performed in accordance with Parts 21, 43, and 91 of the Federal Aviation Regulations, as appropriate, and the aircraft is registered in the United States.

DATE OF ISSUANCE	FAA REPRESENTATIVE	DESIGNATION NUMBER
07-30-99	Robert Alliband	DOA, PC#8

Any alteration, reproduction, or misuse of this certificate may be punishable by a fine not exceeding $1,000, or imprisonment not exceeding 3 years, or both. THIS CERTIFICATE MUST BE DISPLAYED IN THE AIRCRAFT IN ACCORDANCE WITH APPLICABLE FEDERAL AVIATION REGULATIONS.

☆ U.S. GOVERNMENT PRINTING OFFICE: 1991 - 662-228

1. Country-Pays	2. Transport Canada / Transports Canada — Form / Formulaire **24-0078**	3. Certificate Ref. No. - No de référence du bon
CANADA	**AUTHORIZED RELEASE CERTIFICATE - BON DE SORTIE AUTORISE**	SEE BLOCK 5
4. Organization-Organisme		5. Work Order/Contract/Invoice-Bon de travail/contrat/facture
Pratt & Whitney Canada Une société de United Technologies/A United Technologies Company	4045 – 26 AVE. NORTH LETHBRIDGE, ALBERTA T1H 6G2	P. O. # 4000013171

6. Item	7. Description	8.Part No. - No de pièce	9.Eligibility-Admissibilité	10.Qty-Qté	11.Serial/Batch No.-No de série/l	12.Status/Work - État/travail
1	Free Turbine Turbo-Prop PT6A-42	3030700	VARIOUS	1	PCE-PJ0300	MANUFACTURED

13. Remarks - Remarques

CANADIAN TYPE CERTIFICATE E-12, FAA TYPE CERTIFICATE E4EA

THIS ENGINE CONFORMS TO ITS UNITED STATES TYPE DESIGN (TYPE CERTIFICATE NUMBER E4EA) AND IS IN CONDITION FOR SAFE OPERATION. THIS ENGINE HAS BEEN SUBJECTED BY THE MANUFACTURER TO A FINAL OPERATION CHECK AND IS IN A PROPER STATE OF AIRWORTHINESS.

14. New Parts - Pièces neuves	AWM / M de N	Chapter 561 / Chapitre 561
Certifies that the part(s) identified above except as otherwise specified in block 13 has (have) been manufactured/inspected in accordance with the applicable design data and with the airworthiness regulations of the stated country.		Il est certifié que la (les) pièce(s) identifiée(s) ci-haut, sauf si autrement spécifié à la case 13, a (ont) été construite(s)/inspectée(s) conformément aux données de conception pertinentes et aux règlements de navigabilité au pays indiqué.

19. Used Parts - Pièces usagées	CAR / RAC	571.10 - Maintenance Release / 571.10 - Certification après maintenance
Certified that the maintenance specified above has been performed in accordance with the applicable standards of airworthiness. Except as otherwise specified in block 13, the part(s) is (are) released for service.		Il est certifié que la maintenance spécifié ci-haut, a été effectuée conformément aux normes de navigabilité applicables. Sauf si autrement spécifié, à la case 13, la remise en service de la (des) pièce(s) est autorisée.

15. Signature	16. Approval Ref. No.- Réf. d'aiutorisation	20. Signature	21. Approval Ref. No. - Réf. d'autorisation
M. Duncan — TC. 4-58 NO. 025	DOT APPROVAL 4 - 58		
17.Name(typed or printed)-Nom(dactylographié ou imprimé)	18. Date	22.Name(typed or printed)-No(dactylographié ou imprimé)	23. Date
M. DUNCAN	1999 APR 30		

Installer must cross-check eligibility with applicable technical data - Le monteur doit vérifier l'admissibilité avec les données techniques pertinentes

USER/INSTALLER RESPONSIBILITIES

It is important to understand that the existence of this document alone does not automatically constitute authority to install the part/ component/assembly.
Where the user/installer works in accordance with the national regulations of an Airworthiness Authority different than the Airworthiness Authority of the country specified in block 1 it is essential that the user/installer ensures that his/her Airworthiness Authority accepts parts/components/assemblies from the Airworthiness Authority of the country specified in block 1.
Statements 14 and 19 do not constitute installation certification. In all cases the aircraft maintenance record must contain an installation certification issued in accordance with the national regulation by the user/installer before the aircraft may be flown.

RESPONSABILITES DE L'USAGER/MONTEUR

Il est important de bien comprendre que de par son existence ce document ne constitue pas forcément l'autorisation d'installer la pièce/composant/ensemble.
Lorsque l'usager/monteur (euse) travaitle conformément aux règlements nationaux d'une autorité de navigabilité, autre que l'autorité de navigabilité inscrite à la case 1, il est essentiel que l'usager/monteur (euse) s'assure que son autorité de navigabilité accepte les pièces/composants/ensembles de l'autorité de navigabilité inscrite à la case 1.
Les déclarations apparaissant aux cases 14 et 19 ne constituent pas une certification de montage. En tout temps le dossier de maintenance de l'aéronef doit contenir une certification de montage émise selon les règlements nationaux, par l'usager/monteur (euse), avant que l'aéronel puisse décoller.

24-0078

BB-1668 L

1. Country-Pays	2. Transport Canada / Transports Canada — Form / Formulaire 24-0078	3. Certificate Ref. No. - No de référence du bon
CANADA	AUTHORIZED RELEASE CERTIFICATE - BON DE SORTIE AUTORISE	SEE BLOCK 5

4. Organization-Organisme		5. Work Order/Contract/Invoice-Bon de travail/contrat/facture
Pratt & Whitney Canada Une société de United Technologies/A United Technologies Company	4045 – 26 AVE. NORTH LETHBRIDGE, ALBERTA T1H 6G2	P. O. # 4000013194

6. Item	7. Description	8.Part No. - No de pièce	9.Eligibility-Admissibilité	10.Qty-Qté	11.Serial/Batch No.-No de série/l	12.Status/Work - Etat/travail
1	Free Turbine Turbo-Prop PT6A-42	3030700	VARIOUS	1	PCE-PJ0301	MANUFACTURED

13. Remarks - Remarques

CANADIAN TYPE CERTIFICATE E-12, FAA TYPE CERTIFICATE E4EA

THIS ENGINE CONFORMS TO ITS UNITED STATES TYPE DESIGN (TYPE CERTIFICATE NUMBER E4EA) AND IS IN CONDITION FOR SAFE OPERATION. THIS ENGINE HAS BEEN SUBJECTED BY THE MANUFACTURER TO A FINAL OPERATION CHECK AND IS IN A PROPER STATE OF AIRWORTHINESS.

14. New Parts - Pièces neuves	AWM M de N	Chapter 561 Chapitre 561	19. Used Parts - Pièces usagées	CAR RAC	571.10 - Maintenance Release 571.10 - Certification après maintenance
Certifies that the part(s) identified above except as otherwise specified in block 13 has (have) been manufactured/inspected in accordance with the applicable design data and with the airworthiness regulations of the stated country.		Il est certifié que la (les) pièce(s) identifiée(s) ci-haut, sauf si autrement spécifié à la case 13, a (ont) été construite(s)/inspectée(s) conformément aux données de conception pertinentes et aux règlements de navigabilité au pays indiqué.	Certified that the maintenance specified above has been performed in accordance with the applicable standards of airworthiness. Except as otherwise specified in block 13, the part(s) is (are) released for service.		Il est certifié que la maintenance spécifié ci-haut, a été effectuée conformément aux normes de navigabilité applicables. Sauf si autrement spécifié, à la case 13, la remise en service de la (des) pièce(s) est autorisée.

15. Signature	16. Approval Ref. No.- Réf. d'aiutorisation	20. Signature	21. Approval Ref. No. - Réf. d'autorisation
T.C. 4-58 NO. 027	DOT APPROVAL 4 - 58		
17.Name(typed or printed)-Nom(dactylographié ou imprimé)	18. Date	22.Name(typed or printed)-No(dactylographié ou imprimé)	23. Date
J. MACDONALD	1999 APR 29		

Installer must cross-check eligibility with applicable technical data - Le monteur doit vérifier l'admissibilité avec les données techniques pertinentes

USER/INSTALLER RESPONSIBILITIES

It is important to understand that the existence of this document alone does not automatically constitute authority to install the part/ component/assembly.
Where the user/installer works in accordance with the national regulations of an Airworthiness Authority different than the Airworthiness Authority of the country specified in block 1 it is essential that the user/installer ensures that his/her Airworthiness Authority accepts parts/components/assemblies from the Airworthiness Authority of the country specified in block 1.
Statements 14 and 19 do not constitute installation certification. In all cases the aircraft maintenance record must contain an installation certification issued in accordance with the national regulation by the user/installer before the aircraft may be flown.

RESPONSABILITES DE L'USAGER/MONTEUR

Il est important de bien comprendre que de par son existence ce document ne constitue pas forcément l'autorisation d'installer la pièce/composant/ensemble.
Lorsque l'usager/monteur (euse) travaile conformément aux règlements nationaux d'une autorité de navigabilité, autre que l'autorité de navigabilité inscrite à la case 1, il est essentiel que l'usager/monteur (euse) s'assure que son autorité de navigabilité accepte les pièces/composants/ensembles de l'autorité de navigabilité inscrite à la case 1.
Les déclarations apparaissant aux cases 14 et 19 ne constituent pas une certification de montage. En tout temps le dossier de maintenance de l'aéronef doit contenir une certification de montage émise selon les règlements nationaux, par l'usager/monteur (euse), avant que l'aéronef puisse décoller.

24-0078

BB-1668 R